Statement of Requirements

for

Design and Construction

of a

40 Day Endurance
NOAA Fisheries Research Vessel
FRV40-1

Revision F

February 24, 2003

United States Department of Commerce

National Oceanic and Atmospheric Administration

REVISION HISTORY

Revision A – Released with Solicitation Amendment 0002. Incorporated responses to Bidder's Questions.

Revision B – Incorporates ECP Nos. 0001A, 0001B, 0001E, 0001F, 0001G, 0002C, 0002D, 0002F, 0002H, 0002I, 0003A, 0003B, 0003D, 0008C, 0008E, 0008F, and 0031. Incorporates editorial correction to Section 070b ("Circle E").

Revision C - Incorporates ECP Nos. 0001C, 0001D, 0002A, 0002G, 0003C, 0004, 0006, 0014, 0024, 0027, 0030, and 0040.

Revision C.10 - Incorporates ECPs 0005, 0025, 0026, 0032, 0034C, 0035, 0036, 0037, 0041, 0042, 0043, 0044, 0045, 0046, 0047, 0049, 0050 and 0052.

Revision D – Incorporates NECP 001, including SOR Clarifications agreed to by Contractor and ConRep as of October 10, 2002, and incorporates the approved lightship weight, centers and margins for the lead ship in Section 096.

Revision E – Incorporates revisions to the schedules required by Section 042f and 042i.

Revision F - Incorporates ECPs 0039, 0053 and 0054.

Table of Contents

000 GENERAL REQUIREMENTS FOR DESIGN AND CONSTRUCTION 000-1

042 GENERAL ADMINISTRATIVE REQUIREMENTS.....000-1
045 CARE OF THE SHIP.....000-11
070 GENERAL REQUIREMENTS FOR CONSTRUCTION.....000-14
071 ACCESS.....000-29
073 NOISE, VIBRATION AND RESILIENT MOUNTINGS.....000-29
075 THREADED FASTENERS.....000-52
078 MATERIALS.....000-53
079 STABILITY.....000-53
080 LOGISTIC SUPPORT REQUIREMENTS.....000-55
081 MAINTENANCE AND ACCESS.....000-56
083 SUPPLY SUPPORT.....000-58
085 DRAWINGS.....000-62
086 TECHNICAL PUBLICATIONS.....000-68
092 TESTS.....000-69
094 TRIALS.....000-74
096 WEIGHT CONTROL.....000-82
097 INCLINING EXPERIMENT.....000-84
098 MODELS AND MOCKUPS.....000-84
099 PHOTOGRAPHS.....000-85

100 HULL GROUP.....100-1

100 GENERAL REQUIREMENTS FOR HULL STRUCTURE.....100-1
162 STACK.....100-6
170 MAST AND FLAGSTAFF.....100-6
184 NAVIGATION SYSTEM ALIGNMENT.....100-6
191 FIXED PERMANENT BALLAST.....100-7

200 PROPULSION PLANT.....200-1

200 PROPULSION PLANT, GENERAL.....200-1
202 MACHINERY CONTROL SYSTEM.....200-2
233 DIESEL ENGINES.....200-4
235 ELECTRIC PROPULSION SYSTEM.....200-5
243 PROPULSION SHAFTING.....200-5
244 PROPULSION SHAFT BEARINGS AND SEALS.....200-6
245 PROPULSOR.....200-7
252 ENGINEER'S OPERATING STATION.....200-8
256 MACHINERY COOLING WATER SYSTEMS.....200-8
259 DIESEL ENGINE COMBUSTION AIR AND EXHAUST SYSTEMS.....200-8
261 FUEL SERVICE SYSTEM.....200-9
262 LUBRICATION SYSTEMS.....200-9

300 ELECTRICAL GROUP.....300-1

300 GENERAL REQUIREMENTS FOR ELECTRIC PLANT AND CABLING.....300-1
302 ELECTRIC MOTORS AND ASSOCIATED EQUIPMENT.....300-4
310 ELECTRIC GENERATING EQUIPMENT.....300-5
312 EMERGENCY DIESEL GENERATOR.....300-5
313 STORAGE BATTERIES AND CHARGING EQUIPMENT.....300-5
314 POWER CONVERSION EQUIPMENT.....300-5
320 GENERAL REQUIREMENTS FOR ELECTRIC POWER DISTRIBUTION SYSTEMS.....300-6
324 SWITCHBOARDS AND PANELS FOR ELECTRIC POWER AND LIGHTING.....300-9
330 REQUIREMENTS FOR LIGHTING SYSTEMS.....300-9

332 SPECIAL ILLUMINATION 300-10
333 DEICING SYSTEM 300-11

400 ELECTRONIC GROUP 400-1

403 GENERAL REQUIREMENTS FOR NAVIGATION, COMMUNICATIONS AND MISSION ELECTRONICS 400-1
404 RADIO FREQUENCY TRANSMISSION LINES 400-2
405 ANTENNAS 400-2
420 DYNAMIC POSITIONING SYSTEM (DPS) AND AUTOPILOT 400-3
421 NON-ELECTRICAL AND NON-ELECTRONIC NAVIGATION AIDS 400-4
422 NAVIGATION LIGHTS, SIGNAL LIGHTS AND SEARCHLIGHTS 400-5
423 ELECTRICAL AND ELECTRONIC NAVIGATION SYSTEMS 400-5
432 INTERIOR COMMUNICATIONS SYSTEMS 400-7
438 INTEGRATED BRIDGE SYSTEM 400-10
441 EXTERIOR COMMUNICATIONS SYSTEMS 400-11
461 SCIENTIFIC SONAR SYSTEMS 400-12
493 SCIENTIFIC INSTRUMENTATION 400-14

500 AUXILIARIES GROUP 500-1

503 PUMPS 500-1
504 INSTRUMENTS AND INSTRUMENT BOARDS 500-1
505 PIPING 500-2
506 VENTS, SOUNDING AND OVERFLOW ARRANGEMENTS 500-4
507 MACHINERY AND PIPING SYSTEM DESIGNATION AND MARKING 500-4
508 INSULATION FOR MACHINERY AND PIPING 500-5
509 THERMAL INSULATION AND ACOUSTIC ABSORPTIVE TREATMENT FOR DUCTS AND TRUNKS 500-6
512 HEATING, VENTILATION AND AIR CONDITIONING (HVAC) 500-7
514 AIR CONDITIONING 500-11
516 REFRIGERATION EQUIPMENT 500-12
521 FIREMAIN SYSTEM 500-14
524 AUXILIARY SEAWATER SERVICE SYSTEMS 500-14
528 PLUMBING, DECK DRAINS AND VENTS 500-16
529 BILGE AND BALLAST SYSTEMS 500-17
531 DISTILLATION 500-17
532 FRESH WATER COOLING SYSTEMS 500-18
533 POTABLE WATER SYSTEM 500-18
534 MACHINERY AND COMPONENT DRAINS 500-20
541 FUEL FILL AND TRANSFER SYSTEM 500-20
551 COMPRESSED AIR SYSTEMS 500-21
555 FIRE EXTINGUISHING SYSTEMS 500-22
556 HYDRAULIC POWER TRANSMISSION SYSTEMS 500-22
561 STEERING SYSTEM 500-23
562 RUDDER 500-23
565 ROLL STABILIZATION TANK 500-23
568 BOW THRUSTER 500-24
570 GENERAL REQUIREMENTS FOR HANDLING SYSTEMS 500-24
572 STORES HANDLING 500-25
581 ANCHOR STOWAGE AND HANDLING 500-25
582 MOORING AND TOWING FITTINGS 500-26
583 BOATS, BOAT HANDLING AND STOWAGE 500-26
591 MISSION HANDLING SYSTEMS 500-26
593 POLLUTION CONTROL SYSTEMS 500-38

600 OUTFITTING GROUP 600-1

602 HULL DESIGNATION AND MARKING 600-1
603 DRAFT MARKS 600-4

604 LOCKS, KEYS AND TAGS 600-5
611 HULL FITTINGS 600-6
612 LIFERAILS, LIFELINES AND STANCHIONS 600-6
613 FLAG HOISTS, FABRIC COVERS AND CURTAINS 600-7
621 NON-STRUCTURAL BULKHEADS AND PARTITIONS 600-8
622 FLOORPLATES, HANDRAILS AND HANDGRABS 600-9
623 LADDERS 600-10
624 DOORS, HATCHES, SCUTTLES AND MANHOLE COVERS 600-10
625 WINDOWS, FIXED PORTLIGHTS AND AIRPORTS 600-13
631 PAINTING .... 600-14~~15~~
633 CATHODIC PROTECTION .... 600-23~~17~~
634 DECK COVERING .... 600-23~~17~~
635 THERMAL, ACOUSTIC ABSORPTIVE AND FIRE PROTECTION INSULATION TREATMENT OF COMPARTMENTS .... 600-25~~19~~
637 SHEATHING .... 600-26~~20~~
638 THERMAL INSULATION FOR REFRIGERATED SPACES .... 600-26~~21~~
640 REQUIREMENTS FOR LIVING SPACES, MESSROOM AND LOUNGE .... 600-27~~22~~
644 SANITARY SPACES, AND FIXTURES .... 600-29~~24~~
645 LEISURE FACILITIES .... 600-31~~26~~
651 FOOD SERVICE SPACES .... 600-33~~27~~
652 HOSPITAL .... 600-34~~29~~
655 LAUNDRY .... 600-35~~29~~
661 OFFICES AND CONFERENCE ROOMS .... 600-35~~30~~
662 MACHINERY CONTROL CENTER FURNISHINGS .... 600-36~~31~~
663 BRIDGE AND RADIO/CHART AREA FURNISHINGS .... 600-37~~31~~
664 DAMAGE CONTROL LOCKERS .... 600-38~~32~~
665 WORKSHOPS .... 600-39~~33~~
667 LABORATORIES .... 600-40~~35~~
670 STOWAGE REQUIREMENTS .... 600-47~~41~~
671 SPECIAL STOWAGE .... 600-47~~42~~
672 STOREROOMS .... 600-48~~43~~

List of Tables and Figures

TABLE 042-1. PROJECT PECULIAR DOCUMENTS 000-7
TABLE 042-2. GUIDANCE DOCUMENTS 000-7
TABLE 070-1. MISSION OPERATING PROFILES 000-15
TABLE 070-2. MINIMUM LABORATORY AREAS 000-21
TABLE 070-3. CABLE GROUP SEPARATION DISTANCES (MM) 000-25
TABLE 073-1. AIRBORNE NOISE ACCEPTANCE LEVELS FOR SHIP SPACES 000-34
FIGURE 073-1. INTERMEDIATE MASS CONCEPT 000-40
TABLE 073-2. MAXIMUM DIESEL GENERATOR SET ABOVE-MOUNT VIBRATION LEVELS 000-41
TABLE 073-3. MAXIMUM PROPULSION MOTOR ABOVE-MOUNT VIBRATION LEVELS 000-43
TABLE 073-4. MACHINERY NOISE CONTROL MEASURES 000-47
FIGURE 100-1. DECK SOCKETS AND REVERSIBLE PADEYES 100-3
TABLE 202-1. MCS CONTROL STATION CAPABILITIES 200-2
FIGURE 300-1. ELEMENTARY ELECTRIC ONE-LINE DIAGRAM 300-2
TABLE 300-1. NOMINAL RATINGS 300-3
TABLE 493-1. NETWORK TERMINAL LOCATIONS 400-19
TABLE 493-2. SCS CONNECTED EQUIPMENT 400-20
TABLE 493-3. SPARE SENSOR CABLES 400-21
TABLE 504-1. TANK LEVEL INDICATION GRADUATIONS 500-2
TABLE 505-1. MODIFICATIONS TO ASTM F1155 500-3
TABLE 507-1. PIPING DESIGNATION AND MARKING 500-5
TABLE 512-1. HVAC DESIGN CRITERIA 500-8
TABLE 514-1. AIR CONDITIONING PLANT DESIGN CRITERIA 500-11
TABLE 516-1. REFRIGERATION PLANT DESIGN CRITERIA 500-13
TABLE 516-2. BOUNDARY SURFACE TEMPERATURES 500-13
TABLE 516-3. SPACE DESIGN TEMPERATURES 500-13
TABLE 516-4. PRODUCT HEAT LOAD 500-13
TABLE 640-1. SINGLE STATEROOM FURNISHINGS ..... 600-27~~22~~
TABLE 640-2. DOUBLE STATEROOM FURNISHINGS ..... 600-28~~23~~
TABLE 640-3. MESSROOM FURNISHINGS ..... 600-29~~23~~
TABLE 644-1. LABORATORY SINKS ..... 600-30~~25~~
TABLE 645-1 LOUNGE FURNISHINGS ..... 600-31~~26~~
TABLE 645-2. EXERCISE ROOM EQUIPMENT ..... 600-32~~27~~
TABLE 645-3. READY ROOM EQUIPMENT ..... 600-32~~27~~
TABLE 651-1. GALLEY/SCULLERY EQUIPMENT ..... 600-33~~28~~
TABLE 652-1. HOSPITAL FURNISHINGS ..... 600-34~~29~~
TABLE 655-1. LAUNDRY EQUIPMENT ..... 600-35~~29~~
TABLE 661-1. SHIP'S OFFICE FURNISHINGS ..... 600-35~~30~~
TABLE 661-2 CONFERENCE ROOM FURNISHINGS ..... 600-36~~30~~
TABLE 662-1. ENGINEER'S OPERATING STATION FURNISHINGS ..... 600-36~~31~~
TABLE 663-1. BRIDGE FURNISHINGS ..... 600-37~~32~~
TABLE 664-1. DAMAGE CONTROL LOCKER OUTFITTING ..... 600-38~~33~~
TABLE 665-1. ENGINEER'S WORKSHOP OUTFITTING ..... 600-39~~33~~
TABLE 665-2. BOSUN'S LOCKER EQUIPMENT ..... 600-39~~34~~
TABLE 665-3. ET SHOP EQUIPMENT ..... 600-40~~34~~
TABLE 667-1. WET/FISH LABORATORY ..... 600-41~~35~~
TABLE 667-2. COMPUTER LABORATORY ..... 600-41~~36~~
TABLE 667-3. ACOUSTIC LABORATORY ..... 600-42~~36~~
TABLE 667-4. DRY LABORATORY ..... 600-42~~37~~
TABLE 667-5. AUTOSALINOMETER ROOM ..... 600-43~~37~~
TABLE 667-6. HYDROGRAPHIC LABORATORY ..... 600-43~~38~~
TABLE 667-7. CHEMISTRY LABORATORY ..... 600-43~~38~~
TABLE 667-8. FUME HOODS ..... 600-44~~39~~
TABLE 667-9. SCIENTIFIC REFRIGERATORS AND FREEZERS ..... 600-45~~39~~
TABLE 667-10. CONTROLLED ENVIRONMENT ROOM ..... 600-46~~41~~

000 GENERAL REQUIREMENTS FOR DESIGN AND CONSTRUCTION

042 GENERAL ADMINISTRATIVE REQUIREMENTS

042a. General

This Statement of Requirements (SOR) describes the performance requirements for design and construction of a 40-day endurance Fisheries Research Vessel (FRV) for the National Oceanic and Atmospheric Administration (NOAA).

This SOR does not include a complete statement of all Regulatory Body requirements necessary to satisfy the classification and certification requirements of Section 070 and United States Regulatory Bodies. The Contractor must ensure that all such Regulatory Body requirements are met. Certain portions of the design of the NOAA FRV are to be followed by the Contractor without deviation, unless specifically approved in advance by the Government. Those portions of the design are described in the Project Peculiar Documents, and focus on design of the hullform, the layout of laboratory spaces and the propeller. Other design details, presented in the Guidance Documents, are offered as guidance. In these areas, the Contractor is permitted to offer alternative design solutions, which satisfy the stated performance requirements.

Equivalent Equipment. - Where equipment is specified herein by manufacturer's name, make, or model number, "or equal", the manufacturer's specifications and performance characteristics are included by reference in the SOR. The Contractor may propose equivalents to these equipment selections by submitting an Equipment Equivalency Certificate. To determine acceptability of a proposed equivalent item, the Government will review the item based on the following criteria:

a. Meet the performance requirements established herein and those designated by the originally specified equipment manufacturer.
b. Possess required Regulatory Body approvals.
c. Possess equivalent:
    1. Noise and vibration characteristics.
    2. Weight.
    3. Overall dimensions.
    4. Power, HVAC, cooling water, signal types, and other support and interface requirements.
    5. Design for marine service.
    6. Materials.
    7. Maintenance features.
    8. Supply support.
    9. Service experience.
    10. Population in NOAA, UNOLS or commercial marine use.
    11. Vendor-furnished training.
    12. Vendor-furnished service.

13. Technical documentation.

When lesser dimensions and weights, or superior performance, acoustic characteristics, service, material, and maintenance characteristics are demonstrable and are to the advantage of the ship's function and mission, the equivalent item may be acceptable to the Government, provided specified requirements are met.

Where equipment is specified herein as "such as" a manufacturer's name, make, or model number, the manufacturer's specifications and performance characteristics are those determined by the Government to meet mission needs. The Contractor may substitute equivalents to these equipment selections, provided the equivalency requirements of a., b. and c. above are met.

042b. Definitions

ABS - American Bureau of Shipping.

ACS - Aft Control Station.

ADCP – Acoustic Doppler Current Profiler.

AISC - American Institute of Steel Construction.

ANSI - American National Standards Institute.

AMCA – Air Movement and Control Association.

The term **'area'** or **'net area'**, unless otherwise defined, means the available arrangeable area after losses from structure, insulation, linings and distributive systems.

ARI - Air-Conditioning and Refrigeration Institute.

The terms '**as approved**,' '**to approve**', '**approved**', '**as required**', '**required**', and '**as selected**' mean the approval by, the requirements of, or the selection of the Government. Additionally, the terms '**approved**' and '**required**' may also mean approved or required by a Regulatory Agency or Regulatory Body. Wherever these terms are used without further qualification, it is the approval, decision, or direction of the ConRep or Regulatory Bodies, as appropriate, that is required. Where an item is required to be submitted for approval, work must not proceed, except at the sole risk of the Contractor, until notification of approval is received. In the event the subject item is not approved, rationale will be provided, and subject effort must not proceed until such time as a satisfactory and mutually agreeable resolution has been resubmitted and approved. Where the Contractor desires to deviate from the requirements of the contract, compliance with the Configuration Management clause (C-7) of the contract is required.

ASHRAE - American Society of Heating, Refrigeration, and Air Conditioning Engineers.

ASME - American Society of Mechanical Engineers.

ASTM - American Society for Testing and Materials.

AT - Acceptance Trials.

CFE - Contractor-furnished equipment.

CFM - Contractor-furnished material.

CFR - Code of Federal Regulations.

COLREGS or **72 COLREGS** - the International Rules formalized by the Convention on the International Regulations for Preventing Collisions at Sea, 1972, and subsequent amendments, as applicable.

Construction - the construction of the ship to meet the requirements identified in this SOR.

Construction Representative or ConRep - the Government's on-site representative for construction.

Contractor - the firm that holds the prime Contract with the Government for design and construction of the ship.

CRES - Corrosion Resistant Steel, as specified in Section 078.

CPIR – Contract Problem Identification Report.

CPA - Closest Point of Approach.

CTD - Conductivity, Temperature and Depth.

DGPS – Differential Global Positioning System.

DIM - Distributed Isolation Material.

DPS - Dynamic Positioning System.

EOS - Engineer's Operating Station.

EMC - Electromagnetic Compatibility.

EMI - Electromagnetic Interference.

ET - Electronics Technician.

FAT - Factory Acceptance Testing.

FCC - Federal Communications Commission.

FDA - Food and Drug Administration.

First Tier and Subtier References - Any referenced document which is directly cited for use or application by an identifying number or name in this SOR is a first tier reference for each particular use or application for which it is so cited. Any document which is cited in a first tier reference, or in a document referenced therein, is a subtier reference. A document which is a subtier reference in one application may also be a first tier reference in another application when it is cited directly.

GEIPS - Galvanized Extra-Improved Plow Steel.

GFE - Government-Furnished Equipment.

GFI - Government-Furnished Information.

GFM - Government-Furnished Material.

GMDSS - Global Maritime Distress and Safety System.

Good Marine Quality - constructed of materials unaffected by moisture, sea spray, extremes of temperature, and other hazards of the marine environment, and has been designed and constructed to perform its intended function in the marine environment conditions, plus the dynamic motions and cyclic loads imparted in a marine environment. The item must further be designed and constructed for ease and safety of operation under dynamic conditions, and must require minimum maintenance.

Good Shipbuilding Practice - construction to soundly conceived, and engineered detailed working plans, prepared by the Contractor, incorporating the specified components and utilizing recognized shipbuilding construction and testing methods to ensure that the completed

ship conforms to specification requirements. Inspection by the ConRep is for the purpose of verifying the proper functioning of the Contractor's quality assurance measures and is not a substitute for in-process control of quality by the Contractor, nor does it replace or supersede Regulatory Body approvals.

Government - the United States Government.

GPS - Global Positioning System.

HVAC - Heating, Ventilation and Air Conditioning.

IAPP - International Air Pollution Prevention[PA1].

IBS - Integrated Bridge System.

ICES - International Council for the Exploration of the Sea.

IEEE - Institute of Electrical and Electronics Engineers.

IES - Illuminating Engineering Society.

The term "**immediate access**" means that the space, location or compartment must share a common boundary and access, and be on the same deck as the referenced location.

IMO - International Maritime Organization.

IMU – Inertial Measurement Unit.

ISO - International Standards Organization.

IWRC - Independent Wire Rope Core.

Laboratories - Includes all spaces identified by name as laboratories as well as the ET Shop, the Autosalinometer Room, the Autosalinometer Room Vestibule, and the Controlled Environment Room.

LSP - Logistic Support Plan.

MCC - Main Control Console.

MCS - Machinery Control System.

MOCNESS - Multiple Opening and Closing Net Environmental Sampling System.

MSD - Marine Sanitation Device.

NAVSEA - United States Navy, Naval Sea Systems Command.

NAVSHIPS – The predecessor organization to NAVSEA.

NEMA - National Electrical Manufacturers Association.

NFPA - National Fire Protection Association.

NMEA - National Marine Electronics Association.

NMFS - National Marine Fisheries Service.

NOAA - National Oceanic and Atmospheric Administration.

NSN – National Stock Number.

NVIC - USCG Navigation and Vessel Inspection Circular.

OSHA - Occupational Safety and Health Administration.

Owner - the United States Government or its authorized representative.

PO – Purchase Order.

The terms "**provide**" and "**provide and install**" mean to provide all services, labor, materials, systems or equipment to accomplish a function which is not now available.

The term "**ready access**" means that the space, location or compartment must be within the same subdivision, no more than one deck away and with no more than two intervening doors from the referenced location.

Regulatory Body - includes ABS, USCG, FDA, USPHS, OSHA, FCC, and any other industry or Government agency which oversees the construction of the ship, or component or assembly, as required by federal law.

Regulatory Body Requirements or **Regulatory Requirements** - those regulations and interpretations issued by cognizant Federal or international agencies, and the rules and requirements of the American Bureau of Shipping.

RMS - Root Mean Square.

SAMMS - Shipboard Automated Maintenance Management System.

SCC - Ship Control Console.

SCR - Silicon Control Rectifier.

SCS - Scientific Computer System.

SEAS - Shipboard Environmental Acquisition System.

SNAME - Society of Naval Architects and Marine Engineers.

SOLAS - International Convention for Safety of Life at Sea.

SOR - Statement of Requirements.

"**Space and weight**" or "**reserve space and weight**" means that space, weight and support service reservations must be provided. Space and weight items must be incorporated in design analyses and used in the design and selection of service system components and installation. Support services for space and weight items must be terminated within the compartment affected, ductwork must be sized for load, and water and air piping must be terminated on the interior side of compartment bulkheads unless otherwise specified. Electrical service for space and weight items must be carried to the intended power distribution panel or load center.

[PA2]**SSPC** - Steel Structures Painting Council.

SSV - Single System Vendor.

THD - Total Harmonic Distortion.

Ton - Metric ton (1,000 kilograms).

TMOP - Technical Manual Organization Plan.

UL - Underwriters Laboratory.

UNOLS - University National Oceanographic Laboratory System.

UPS – Uninterruptible Power System.

USCG - United States Coast Guard.

USPHS - United States Public Health Service, US Department of Health and Human Services.

USSG - United States Steel Gauge.

VCG - Vertical Center of Gravity.

VMS - Voyage Management System.

Wherever Practicable - means that the requirement must be effected where feasible.

WBS - Work Breakdown Structure.

To ensure commonality of understanding, definitions of words used throughout the SOR are those contained in Webster's Unabridged Dictionary.

042c. Effective Issue

Where industry standards or Government Specifications are referred to, the issue or revision in effect on the date of issue of the Request for Proposals shall apply.

Where manufacturer's type, model, or other commercial designation is referred to herein, the characteristics in effect on the date of submission of the Contractor's final proposal shall apply. Where model numbers or other commercial design actions have been superseded since submission of the Contractor's final proposal, new model numbers or designations may be utilized, provided the equipment characteristics associated with the new designation are the same as or superior to those associated with the superseded designation.

042d. Order of Precedence

In case of inconsistency between the requirements of the Contract, this SOR and the documents referenced herein, the following order of precedence applies:

a. The Contract.
b. The SOR.
c. Project Peculiar Documents.
d. First tier references.
e. Subtier references.
f. Guidance Documents.

In case of conflict between Regulatory Body requirements, and other specific requirements of this SOR, Regulatory Body requirements take precedence over the SOR requirements. Where such conflict is identified, the Contractor must notify the Government of the conflict and the proposed method of compliance with Regulatory Body requirements. Where SOR requirements exceed Regulatory Body requirements, no conflict exists and the specific SOR requirements take precedence.

Silence of one document with respect to details or requirements in another document is not considered an inconsistency.

Where first tier references cited herein use terms similar to "should" or "recommended", those requirements are mandatory.

Project Peculiar Documents - Project Peculiar Documents are listed in Table 042-1. No departure from details of a Project Peculiar Document must be made without prior written approval of the Government.

Guidance Documents - Guidance documents are listed in Table 042-2. A Guidance Document illustrates design features of the ship, but does not depict, nor is it intended that it depict, all features and details of the systems and structures to which it relates. [NECP 001]It provides information which, when utilized in conjunction with applicable SOR requirements, Project Peculiar Documents, and other information, ~~will~~ may result in an acceptable design. Departures from specific details may be made without approval, providing compliance with the SOR and Project Peculiar Document requirements is maintained.[NECP 001] Guidance Documents will not necessarily be updated or revised to reflect modifications or changes to the SOR made during the contract. The phrase "as shown on the Guidance Documents" means that the stated capability or feature is required, and must be provided in a manner which generally complies with the Guidance Document, and which meets all other requirements of the SOR, Project Peculiar Documents and other contract requirements.

Table 042-1. Project Peculiar Documents

Drawing No.	Revision	Title
[ECP 0026]~~FRV40 802-00001~~ frv.srf	--[PA3]	~~Hull Lines and Offsets~~Hullform (FASTSHIP file, dated 19 October 1999)[ECP 0026]
[ECP 0052]~~FRV40 802-00002~~FSV40m_JULY 2002.zip	--	Propeller IGES File (includes filenames README.txt, FSV40m_JULY2002.igs and FSV40m_JULY2002.dat, all dated 18 July 2002) [ECP 0052]
[NECP 001]FA 02	???	General Arrangement
~~FRV40 802-00003~~	~~A~~[PA4]	~~Laboratory Interdependencies~~[NECP 001]

Table 042-2. Guidance Documents

Drawing No.	Revision	Title
[ECP 0026]FRV40 802-00001	--	Hull Lines and Offsets[ECP 0026]
[NECP 001]~~FRV40 802-00004~~	~~A~~	~~General Arrangement~~
~~FRV40 802-00005~~FA 03	~~A~~???	Machinery Arrangement
~~FRV40 802-00008~~	~~A~~	~~Electric One-Line Diagram~~
~~FRV40 802-00009~~	~~--~~	~~Stability Analysis~~[NECP 001]

042e. Correspondence

Correspondence must be prepared and submitted.

042f. Schedules

The Contractor must prepare and maintain schedules necessary for the purpose of establishing an orderly and systematic construction program, relaying that construction plan to the Government, and providing the basis of evaluation of the Contractor's performance. The schedules must include the following:

a. A Design and Construction Schedule to show the order in which the design and construction of the ship will take place.

b. A Drawing Schedule.

c. A Material Ordering Schedule.

d. A Schedule of Major Events and Milestones.

e. [Revision E] A Multiview Report (MVR) showing earned value management system data. [Revision E]

042g. Purchase Orders

A purchase order (PO) index must be prepared, maintained current and available for review by the Government at all times. Copies of purchase orders and changes thereto must be prepared.

042h. Government-Furnished Material (GFM)

The Contractor must unload, inspect and clean any identified GFM, including removal of any temporary preservative at the appropriate time. The Contractor must handle, weigh, store, maintain and assemble GFM when disassembled for shipping purposes. The Contractor must test GFM to ensure proper operation prior to ship delivery.

Articles and equipment furnished by the Government must be installed by, or have satisfactory stowage onboard the ship provided by, the Contractor to the satisfaction of the Government. The Contractor must furnish labor and materials, including foundations, wiring, piping and accessories necessary for installation, testing and stowage of GFM.

Where GFM is intended as a part of a system or assembled equipment, the Contractor must ensure that the installation of the whole system or equipment does not degrade the performance of the GFM.

042i. Technical Documentation

Equipment Equivalency Certificates. - The Contractor must prepare equipment equivalency certificates as necessary for items identified as manufacturer make and model number “or equal”. The certificates must contain information to permit evaluation as to whether the proposed item meets the requirements of the originally specified item. Vendor technical data sheets must be included. If an item must be modified to conform to the requirements, a description of such modifications must be included. If the proposed equivalent item is non-metric, the certificate must identify whether metric equipment or materials are available. Equipment not approved within 30 [PA5]days after receipt of each request shall be considered disapproved by the Government.

Correspondence. - Copies of correspondence with attachments (drawings, sketches, photographs, slides viewgraphs, presentations, specifications, manuals, studies, analyses, and related correspondence) from the Contractor to non-Regulatory Body agencies of the Government must be provided.

Regulatory Body Correspondence. - Copies of correspondence to and from the Contractor and Regulatory Bodies must be provided.

Conference/Meeting Agendas and Minutes. - The Contractor must prepare agendas for, and minutes of, meetings with the Government. Meeting agendas must describe the following: purpose and objective; recommended location, date and duration; a daily chronological listing of each major topic for discussion and a time schedule; brief description of progress on action items or problems identified at previous meetings; a complete list of all documentation to be available for review; and other pertinent information such as identification of any CPIRs, open items, and status of items relative to noise control requirements.

Meeting minutes must provide documentation of technical information and data required to record joint Contractor/Government decisions, action items and agreements reached during conferences, meetings, formal reviews or audits. Minutes must include the following: type/title of meeting and meeting date; purpose; location; summary of the discussions, decisions, agreements, and directions; list of attendees; and copies of action item sheets for any actions identified during the meeting.

Schedules. - The Contractor must prepare schedules necessary for the purpose of establishing an orderly and systematic construction program, and identifying progress against planned scheduled events. [Revision E] Schedules are to be developed and reported to the Government monthly. The schedules and progress billings must be integrated and must provide the following~~The schedules may be integrated, or provided separately, and must include the following~~[Revision E]:

a. **Design and Construction Schedule.** - A Design and Construction Schedule must show the order in which the design and construction of the ship will take place, including the identification of major events and milestones. This schedule must be in sufficient detail to identify engineering and production activities, which impact project scheduling. At a minimum, the schedule must include start of design, design reviews, release for production and start and completion of the following: fabrication, assembly and erection of major structural units, installation of major foundations, machinery installations, electrical systems installation, and system checkout/testing. The Design and Construction Schedule must contain a status for each Regulatory Body Certificate during the design and construction phases.

b. **Drawing Schedule.** - A Drawing Schedule must consist of a list of Selected Record Drawings and data, and a list of ship construction drawings. The schedule must be keyed to the design and construction schedule and must identify the title, drawing number, drawing development media (electronic/manual), computer file name (if applicable), Regulatory Body submittal and approval dates, original start date, scheduled issue date, and actual issue date, status, revision level and revision date.

c. **Material Ordering Schedule.** - A Material Ordering Schedule must identify material procurement orders, planned material delivery and receipt dates, applicable purchase order number(s), anticipated lead time, scheduled and actual purchase order issue dates, name of supplier, required and actual delivery dates. All Noise Critical Equipment must include Structureborne and/or Airborne Noise requirements in the specific PO including those equipments ordered by the Single System Vendors (SSVs).

d. **Schedule of Major Events and Milestones.** – [NECP 001]A Schedule of Major Events and Milestones must identify key events including ~~major design reviews and contract deliverables,~~ start of construction, keel laying, machinery installation, scientific and mission gear installation, launching, compartment testing, Builder's Trials, Acceptance Trials, Mission Trials and ship delivery.[NECP 001]

e. [Revision E] **Multiview Report (MVR)** – Earned value management system (EVMS) data reported in Contractor's format.

1. Organization of data -

i. A work breakdown structure (WBS) tailored to effective shipyard internal management control shall be used.

ii. The company's planning, scheduling, budgeting, work authorization, cost accumulation, and billing processes shall be integrated.

iii. The Contractor's FSV program work breakdown structure and program organization structure (engineering and production) shall be integrated in a manner that permits labor hour and schedule performance measurement by elements of both structures as needed.

iv. The contractor is to establish budgets for authorized work with identification of labor hour elements as required for internal management.

v. The contractor's work authorization system shall contain discrete work packages that establish budgets and other measurable units sufficient to accomplish effective shipyard management control and reporting.

vi. The sum of all work and planning package budgets, including management reserve, shall equal the control account budget.

vii. The contractor shall identify and control level-of-effort activity by time phased budgets established for this purpose.

viii. The contractor shall ensure that the target labor goal is reconciled with the sum of all internal program budgets and management reserves.

2. Analysis and Reports

i. MVRs shall be provided at least monthly using actual data from the contractor's internal management control system reconciled to the contractor's costs cost accounting system.

1. The contractor shall provide an MVR based on an earned value assessment process to provide labor hour and schedule performance information for NOAA program management. The report shall be the primary means of documenting the on-going communication between the contractor and the program manager. This report shall provide labor hour and schedule trends to date and provide indications for both labor hour and schedule problems and the effect of implemented management actions to resolve such problems. Revised estimates of labor hour at completion shall be based on performance to date and estimates of future conditions.

2. The following data shall be provided for both production budget/actual data and engineering budget/actual data:

a. Contractor's name and location

b. Contract number, award date, and contract modification number upon which the report is based.

c. Identification of the report as containing production data or engineering data.

d. Report period – the beginning and ending dates of the period covered by the report.

e. Planned hours to date, expressed as a percentage of budgeted hours.

f. Actual hours to date, expressed as a percentage of budgeted hours.

g. Earned hours to date, expressed as a percentage of budgeted hours.

h. Percent complete.

i. Estimate to complete, expressed as a percentage of budgeted hours.

j. Estimate at completion, expressed as a percentage of budgeted hours.

k. Schedule efficiency to date.

l. Labor hour efficiency to date.

m. Labor hour variance.

n. Planned hours for the period.

o. Actual hours for the period.

p. Earned hours for the period.

q. Schedule efficiency for the period.

r. Labor hour efficiency for the period. [Revision E]

Purchase Orders. - Copies of purchase orders and changes thereto must be prepared. Purchase orders must contain the Government designation of the ship for which material is intended, part/model number, applicable specifications and drawings, firm name, address of subcontractor or vendor, required delivery dates by line item, tests and inspections required. Each system, equipment, component and data items must be assigned a separate line item; however, similar items may [PA6]be grouped together as a single line item.

Purchase Order Index. - An index of purchase orders must be prepared. The index must include purchase order number, description, manufacturer name, manufacturer address, manufacturer make and model number, applicable 3-digit WBS number, weight, and current dollar value. Canceled and superseded purchase orders must remain on the index. Changes and revisions must be listed directly below the purchase order to which they apply and include updated information. Reissued purchase orders must reference original purchase order numbers.

045 CARE OF THE SHIP

045a. General

The ship and construction modules must be maintained in a safe, clean, and workmanlike condition during the entire period that the ship is in the Contractor's possession. All parts of the ship including tanks and voids must be kept free of chips, shavings, refuse, dirt, water, and other extraneous matter at all times. Places that are to be permanently closed or that may become inaccessible must be inspected and approved with all rubbish removed prior to closure. Appropriate measures must be taken to minimize wear and damage from construction and to prevent corrosion or other deterioration.

All electric motors must be provided with heaters. Strip heaters, where installed, must be activated. Heat lamps must be provided for electric motors without strip heaters. Unpainted machine parts, both interior and exterior, must be protected against corrosion and deterioration during the interval between manufacture and placing in service aboard the ship. If removal of the preservative is required for testing the machinery or equipment prior to installation, the Contractor must represerve and protect the machinery or equipment prior to installation in accordance with manufacturers' instructions. Preservative on working parts must be removed prior to the operation of the machinery or equipment.

Equipment, prefabricated parts, furniture, piping, machinery, equipment, and outfit must be protected from damage at all times, be kept free of vermin and contamination, and be kept clean and protected during manufacture, storage, assembly, and installation.

Prior to delivery, the interior and exterior of the ship must be swept, washed down, or otherwise cleaned and the ship put in a habitable condition for the crew.

045b. Fire and Flooding Protection

The Contractor must develop and maintain a comprehensive and effective system of fire prevention, fire detection, and firefighting to protect the ship prior to delivery. The Contractor must also develop and maintain a comprehensive and effective system of flooding prevention, flooding detection, and flooding damage control repair and dewatering capability to protect the ship while it is waterborne prior to delivery.

045c. Organization and Training

Fire and flooding protection organization charts and instructions must be prepared, and must be kept up to date. Training drills must be conducted at the beginning of construction, and at intervals of no more than six months thereafter, to determine the adequacy of the system. The Contractor must correct any deficiencies discovered and take prompt action to improve training and equipment.

045d. Hull Protection During Outfitting

The Contractor must adequately protect the underwater part of the hull from underwater corrosion prior to ship delivery. Rigid control of welding and electrical grounding must be maintained for the protection of the hull, stern tube, and other hull appendages.

An impressed current cathodic protection system must be provided for the hull immediately after launching and until delivery of the ship. The potential of the hull must be held in the range of -750 to -859 mV (silver - silver chloride cell) in order to provide protection against corrosion of the hull. In fresh water locations the Contractor must maintain a hull potential of in the range of -750 mV to - 900 mV (silver - silver chloride cell) during the time the ship is afloat. The Contractor must log the hull potential daily for the first three weeks after the ship has been launched and weekly thereafter. The cathodic protection system used must be compatible with the underwater paint system applied.

045e. Launching

The Contractor is responsible for the safe launching of the ship at a time and manner as agreed upon by the Contractor and the Government. A launching plan including launching calculations must be prepared.

045f. Technical Documentation

Fire and Flooding Protection Plan. - A fire and flooding protection plan must be prepared describing the procedures the Contractor will use to provide surveillance and prevent, fight, and control fire and flooding. This plan must include the controls, responsibilities, interfaces, procedures, schedules and resources necessary to implement the plan. The plan must include, but not be limited to, a damage control organization chart, an outline of protection and detection systems and associated detectors, alarms, and telephones; fire, flooding, evacuation, and watch bills, and pertinent instructions outlining the required precautions and actions regarding the following:

a. Flooding, both gross and local

b. [NECP 001]Heavy snow loading, excess firefighting water and flood water which could cause static instability of the hull when afloat. [NECP 001]

~~c.Instability of the hull when afloat.~~

~~d.~~c. Welding, cutting, smoking, and electric arcing, and handling of combustible material, such as fuel oil, paint, wood staging and trash, that could result in fire ignition.

~~e.~~d. Reduced accessibility on an incomplete ship.

~~f.~~e. Requirements and restrictions for inspection, for roving patrols, and for controlling fires or flooding in security and radiation areas.

~~g.~~f. Safety instructions for fire fighting must also contain requirements and restrictions for inspection and for fighting fires.

The fire and flooding protection organization chart and instructions must be kept up to date. Revisions must be submitted for approval prior to reaching the level of construction to which they are to be applied.

Hull Protection Plan. – A hull protection plan must be prepared describing the location of connections, procedures and schedule of measurements, responsibilities, and review of weekly logs.

Launching Plan. – A launch procedure must be prepared with calculations supporting the estimated weight, VCG and satisfactory stability in the launch condition with appropriate restraints and safety criteria established. The procedure must be approved by the Government prior to launch. The launching plan may be presented in the Contractor's format. The launching plan must include the following:

a. A description of construction of ground ways, sliding ways, and foundation,

b. Inclination and camber of ways,

c. The type and amount of lubricants, method of application, and estimated coefficients of static and sliding friction,

d. Size and spacing of grease irons,

e. A description of the construction of the cradle, including fore and after poppets,

f. Number, size, and arrangement of wedges,

g. Description of outside shoring and blocking,

h. Description of internal shoring,

i. Arrangement for snubbing,

j. A statement of degree of completion of hull and machinery at launching,

k. Procedure and schedule for removing blocks and shores, removing grease irons, for wedging up, and letting go,

l. Customary launching calculations,

m. Docking Drawing.

If other means of launching are proposed, the launching plan must contain information and computation comparable to the level of detail required above.

070 GENERAL REQUIREMENTS FOR CONSTRUCTION

070a. General

The ship, equipment, fittings and workmanship must be of good marine quality.

The ship, equipment and fittings [PA7]must be designed and constructed in accordance with ASTM F1332, Standard Practice for Use of SI (Metric) Units in Maritime Applications to the maximum extent practicable. The Human Engineering principles of ASTM F1166, Standard Practice for Human Engineering Design for Marine Systems, Equipment and Facilities, must be followed for design of controls and indicators and for interfaces with machinery and gear handling systems.

The ship must be capable of fisheries research operations in coastal and deep ocean areas, including the following typical missions:

a. Hydroacoustic surveying operations along tracklines, using installed scientific and navigation sonars at ship speeds up to and including 11 knots.

b. Bottom trawling at 4 knots with a maximum net drag of 160 kN. Bottom trawling will require use of the installed Trawl Monitoring System, Trawl Control System and Dynamic Positioning System to maintain tracklines and to follow predetermined depth contours.

c. Pelagic (midwater) trawling at 5 knots with a maximum net drag of 160 kN. Pelagic trawling will require the use of the Trawl Monitoring System, Trawl Control System and Dynamic Positioning System.

d. Marine Mammal Observation operations at a sustained speed of 10 knots, using “Bigeye” binoculars.

e. Oceanographic and hydrographic operations from the Side Sampling Station and over the stern, while maintaining a constant position with respect to the ocean floor. This will require use of the Dynamic Positioning System, installed sonar systems and oceanographic and hydrographic winches, and will involve deployment and recovery of surface and sub-surface scientific equipment.

f. Launch, recovery and towing of scientific equipment, both tethered and autonomous, including the handling, monitoring and servicing of remotely operated vehicles and other towed scientific systems.

The ship must be capable of the following speeds in the full load condition, including light ship service life margin, with the centerboard fully extended:

Trial Speed:	14 knots
Midwater Trawl Speed:	5 knots in 4 m waves and 35 knot winds with a 160 kN trawl drag at best heading
Bottom Trawl Speed:	4 knots in 4 m waves and 35 knot winds with a 160 kN trawl drag at all headings at 1000 fathoms trawl depth
Minimum Speed:	1 knot in calm water using main thrust; 0.1 knot in calm water using auxiliary thrust
Continuous Speed Range:	From 0 knots to trial speed, with transition from auxiliary to main thrust as appropriate

Trawling operations will require the use of other installed winches and the aft deck cranes. Launch and recovery of scientific equipment may require use of aft deck cranes and/or the stern gantry as well as installed winches. All operations require shipboard data processing and sample analyses in the laboratory spaces, using scientific instrumentation and the installed data processing network (Scientific Computer System).

The ship must be designed to function continuously during a 40-day, at-sea deployment without sustaining a system failure that cannot be corrected at sea, or that results in degradation of mission capabilities.

Operating profiles for major missions are defined in Table 070-1. The ship must have a transit range of at least 12,000 nautical miles at 12 knots.

Table 070-1. Mission Operating Profiles

Mission Element	CRUISE TYPE			
	Marine Mammal Observation	**Bottom Trawl**	**MOCNESS Survey**	**Hydroacoustic/ Pelagic Trawl**
Transit	Not Applicable	120 Hours at 13.5 Knots	407 Hours at 13.5 Knots	80 Hours at 13.5 Knots
On Station	920 Hours at 10.0 Knots	Not Applicable	523 Hours Towing 17.8 kN Resistance at 1.5 Knots	520 Hours at 11.0 Knots
Between Stations	Not Applicable	360 Hours at 12.0 Knots	Not Applicable	40 Hours at 12.0 Knots
Drift/Anchor	40 Hours at 0 Knots	Not Applicable	Not Applicable	Not Applicable
Trawling With 160 kN Resistance Net	Not Applicable	360 Hours at 4.0 Knots	Not Applicable	280 Hours at 5.0 Knots
Ocean Research	Not Applicable	120 Hours at 0 Knots	30 Hours at 0 Knots	40 Hours at 0 Knots
Total Hours	**960**	**960**	**960**	**960**

070b. Regulatory Body Requirements

The ship must be designed, constructed under ABS survey, and classified under ABS A1 ✠ Circle E, ✠AMS, ✠ACCU, ✠DPS-1, unrestricted service, Ice Class C0, and ABS Record of Notation CRC for compliance with ABS Guide for Certification of Cranes (including the requirements of API 2C). A Register of Lifting Appliances must be obtained.

The ship must be constructed and certificated in accordance with 46 CFR, Subchapter U, and must comply with applicable federal regulations[PA8]. Inspection and certification must be in accordance with the procedures of NVIC 10-82.

The Contractor must provide the materials, equipment and outfit items required for the ship to operate in compliance with Regulatory Body requirements, including the requirements of 33 CFR 164, 46 CFR 196 and for operations in latitudes higher than 35 degrees.

The Summer Load Line assignment must correspond to a displacement of not less than full load plus service life allowance.

The Contractor must obtain and provide Panama and Suez Canal Special Tonnage Certificates, United States and International Certificates of Admeasurement (using both regulatory and registry tonnages), Deratting Exemption, Certificate of Sanitary Construction, certificates of compliance with MARPOL Annex I and Annex V, and the following SOLAS certificates:

a. Cargo Ship Safety Construction Certificate.
b. Cargo Ship Safety Equipment Certificate.
c. Cargo Ship Safety Radio Certificate.

The ship shall be designed, constructed and documented such that the Government may obtain a SOLAS Safety Management Certificate[PA9].

Diesel engines must comply with the requirements of MARPOL Annex VI and the requirements of 40 CFR Part 89, regardless of implementation date. An International Air Pollution Prevention (IAPP) certificate must be provided[PA10].

Materials must meet the requirements of SOLAS and IMO Resolution MSC.61(67) (the FTP Code) for installations after 31 December 2003.

The ship must be equipped to satisfy Panama Canal Transit Regulations.

The Contractor must obtain and provide GMDSS certification for Sea Area A4.

Design and installation of electrical and electronic systems must be in accordance with IEEE Standard 45-98, IEEE Recommended Practice for Electric Installations on Shipboard, and with the requirements herein.

070c. Principal Characteristics

The principal dimensions of the ship must be as shown below:

Length Overall	63.6 m
Length BP	58.0 m
Beam	15.0 m

Draft	5.9 m design (centerboard up)
	9.15 m design (centerboard down)
Molded Depth	8.65 m

An integrated diesel electric propulsion system must be provided. The propulsor and bow thruster must permit continuous ship speed control from zero to maximum continuous ahead and astern speeds. The machinery control system must maintain selected propeller shaft speed within plus or minus 1/2 r/min under steady state conditions. The propulsion plant must provide astern power as required by the regulatory bodies and maneuverability and stationkeeping requirements.

The ship must be provided with a retractable centerboard, as required by Section 100, principally for housing selected sonar system transducers. Ship speed, endurance, seakeeping, stationkeeping, and precision trackline requirements must be met with the centerboard extended. Directional stability and turning requirements must be met with the centerboard retracted.

The ship must be capable of maintaining a forward speed of 2 knots in 4 m seas and 35 knot winds at all times while hauling back (recovering) the trawl with the trawl winch drums half full of cable and turning at maximum speed.

Diesel Fuel Marine, ASTM D975, Grade 2-D must be used by fuel burning equipment. Fuel rates must be calculated in accordance with SNAME Technical and Research Bulletin 3-49, "Marine Diesel Power Plant Practices," taking into consideration the equipment manufacturers' recommended margins for fuel tolerance. Fuel rates must be calculated based on the stated speeds of the ship operating at full load condition in calm water, fair weather and with a clean bottom.

Fuel capacity must be provided for the most demanding of the operating profiles defined in Table 070-1, with a minimum capacity of 350 MT. Fuel capacity required for each operating profile must be calculated, assuming calm water conditions. Fuel capacity must be based on the 24-hour average electric load for each operating condition. The total fuel consumption must be calculated based on the fuel rates associated with all fuel burning equipment and their expected operating periods. The required fuel load must include a reserve fuel allowance of 15 percent. A tailpipe factor of 2.0 percent must be applied to all tanks.

All gravity or pumped overboard discharges, except for weather deck drains, discharges from the uncontaminated seawater and scientific seawater sampling systems, and from the selectable main seawater discharge, must be located on the port side.

The 01 Level forward of the deckhouse and the top of the Bridge must have sheer, camber, or both, to prevent pooling of water. Deck drains must cascade from upper to lower decks and ladders must be protected from drainage splashing.

070d. Maneuverability

The ship must be capable of achieving a tactical diameter of less than 3 ship lengths in either direction at 13 knots, free route, at full load condition in calm water, in fair weather with a clean bottom, without the use of the bow thruster.

The ship must have the capability to rotate about midships at zero forward speed in seas up to 2.5 m significant wave height, in a 2.5 knot current and 30 knot wind.

The ship must be capable of turning 180° to either direction within one ship length at speeds up to 3 knots in calm water, using only the rudder. The ship must also be capable of turning 180° to either direction within one ship length at speeds up to 3 knots, in seas up to 2.5 m

significant wave height, in a 2.5 knot current and 30 knot winds, using both the rudder and bow thruster.

Stationkeeping. - The ship must be capable of keeping station within a watch circle of one ship length diameter, on best heading, in seas up to 2.5 m significant wave height, wind speed up to 35 knots, and current up to 3 knots, acting simultaneously. Wind and waves shall be considered to act in the same direction. The requirement must be satisfied with the angle between current direction and wind/wave direction from zero to at least 180 degrees. The Bretschneider short crested spectrum must be used, with modal periods of 7, 9, 11 and 13 seconds to be considered as a minimum.

Precision Trackline. - The ship and control systems must be capable of automatically and manually maintaining track within a specified track error, while performing precision trackline operations.

In performing precision trackline assessments, the environment, consisting of wind, waves and current, shall be considered to act in the same direction. The crab angle shall be considered the angle between the track and the centerline of the ship. The environmental angle shall be considered the angle between the track and the environment, such that when the environmental angle is zero, the environment is opposite the trackline heading. All ship speeds shall be speed through the water.

Precision trackline operations must be performed with and without a tow, up to and including the following conditions:

a. **Acoustic Survey Trackline.** - The ship must be capable of automatically and manually maintaining track within a track error of 50 m either side of the track, while performing hydroacoustic surveys at speeds up to and including 11 knots, in seas up to 2.5 m significant wave height, 3 knot current and 35 knot winds, for all environmental angles between 0° and 180° port or starboard.

b. **Towing Trackline.** - The ship must be capable of automatically and manually maintaining a trackline within 100 m with a crab angle less than or equal to 45° at a speed of up to 3 knots, with a towing resistance of 160 kN parallel to the track, in seas up to 2.5 m significant wave height, 3 knot current and 35 knot winds, for all environmental angles between 0° and 45° port and starboard.

c. **Slow Speed Trackline for Small Samplers and Towed Devices.** - The ship must be capable of automatically and manually maintaining a trackline within 10 m with no restriction on crab angle at a speed of 1.0 knot, with a towing resistance of 17.8 kN, in seas up to 2.5 m significant wave height, 3 knot current and 35 knot winds, for all environmental angles between 0° and 180° port and starboard.

Maneuvering performance must be calculated to ensure compliance with these requirements. A maneuvering performance prediction report must be prepared.

070e. Seakeeping Performance

The ship motions performance of the ship must be evaluated in 2.5 m significant waves at vessel speeds of 0 and 11 knots, and in 4.0 m significant waves at 0 and 4 knots. For each significant wave height, an appropriate range of spectral modal periods must be considered in both long crested and short crested waves. The Bretschneider spectrum must be used.

A passive, free surface type roll stabilization tank must be used to achieve the required performance. The tank must be installed approximately as shown on the Guidance Documents. The tank must be sized to provide the required performance and effective stabilizing moments with the proper phase differences for all expected operating conditions. Section 565 provides additional requirements for the tank design.

The required ship motion performance must be as follows:

Maximum RMS roll angle	4 degrees
Maximum RMS vertical acceleration	0.2 g
Maximum RMS lateral acceleration	0.1 g

The vertical and lateral acceleration performance must be evaluated for the following locations:

a. Aft outermost edge of aft working deck,
b. At the side sampling station,
c. At a point on the ship's centerline in way of the Ship Control Console on the Bridge,
d. At a point on the ship's centerline in way of the Marine Mammal Observation Stations.

A report must be submitted providing calculations of the ship motions performance of the vessel for the above stated sea conditions and locations on the ship.

070f. Accommodations and Mission Spaces

The ship must be provided with properly equipped and outfitted enclosed and open spaces in order to allow the ship to accomplish all missions defined in Section 070a. As a minimum, the spaces described in this section must be provided.

Access between ship interior spaces, laboratories, Ready Room, and the exterior of the Main Deck must be as shown on the Project Peculiar Documents.

Accommodations. ~~—~~ [NECP 001]Staterooms with permanent berthing and toilet/showers (T/S) must be provided for 39 persons, comprised of three single staterooms~~ with minimum area of 16 m^2 each~~, seven double staterooms~~ with a minimum area of 12 m^2 each~~, and 11 double staterooms~~ with a minimum area of 14 m^2~~. ~~Stateroom areas are inclusive of T/S spaces.~~ Each stateroom must be provided with a private T/S~~, with a minimum area of 2.2 m^2~~. [NECP 001]

Complement related facilities, services, lifesaving equipment, stores, and functions must be based on 39 persons. The crew will be comprised of twenty persons.

Hospital Space. - A hospital with T/S must be provided, outfitted in accordance with Section 652 and regulatory body requirements. [NECP 001]~~The Hospital must have a minimum area of 13 m^2, exclusive of T/S space.~~[NECP 001] Regulatory body requirements for lifesaving equipment for berthing spaces for two persons must be provided and stored in the space.

Public Toilets. - A public washroom/water closet (WR/WC) must be located adjacent to the laboratories and accessible from the laboratory area passageway. A public WR/WC must be provided in the immediate vicinity of the Bridge. A public toilet/shower (T/S) must be provided in

the accommodations area on the second deck. Public WR/WC and T/S spaces must be outfitted as specified in Section 644.

Leisure Spaces. - A Lounge and an Exercise Room must be provided. [NECP 001]~~The lounge must have a minimum area of 24 m^2, and the Exercise Room must have a minimum area of 17 m^2.~~[NECP 001] Each space must be outfitted as specified in Section 645.

Food Service Spaces. - The following food service spaces, outfitted as specified in Section 651, must be provided:

a. [NECP 001]Galley, ~~with a minimum area of 43 m^2,~~ located on the Main Deck.[NECP 001] The Galley must include scullery facilities.

b. [NECP 001]Messroom, ~~with a minimum area of 64 m^2,~~ located on the Main Deck. [NECP 001]

Utility Spaces. - The following utility spaces must be provided:

a. [NECP 001]Trash Room, located on the main deck, ~~with a minimum area of 11 m^2,~~ equipped as specified in Section 593. [NECP 001]

b. [NECP 001]Laundry, ~~with a minimum area of 15 m^2,~~ outfitted as specified in Section 655. [NECP 001]

c. [NECP 001]Engineer's Workshop, ~~with a minimum area of 20 m^2,~~ outfitted as specified in Section 665. [NECP 001] The Engineer's Workshop must be located adjacent to the main machinery space.

d. [NECP 001]Bosun's Workshop, ~~with a minimum area of 9 m^2,~~ outfitted as specified in Section 665. [NECP 001]

Additional utility spaces, such as fan rooms, vent trunks, refrigeration machinery rooms, battery locker, sewage treatment room and CO_2 rooms must be provided as necessary to meet the requirements of this SOR.

Ship's Office. - [NECP 001]A Ship's Office Suite~~, with a minimum area of 20 m^2~~ must be provided and outfitted as specified in Section 661. [NECP 001]

Conference Room. - [NECP 001]A Conference Room ~~with a minimum area of 21 m^2~~ must be provided and outfitted as specified in Section 661. [NECP 001]

Bridge Arrangement. - Ship control stations on the Bridge must be located at the SCC, with secondary stations at the port and starboard control stations and at the ACS.

The Bridge must be located and arranged to ensure the following minimum visibility requirements:

a. From the SCC, clear visibility of the horizon through an arc from at least 22-½ degrees aft of the port beam, forward and around to at least 22-½ degrees aft of the starboard beam, as well as visibility of the horizon directly aft.

b. 360 degree visibility of the horizon to an observer free to move within the Bridge in an area bounded by lines 3000 mm either side of the centerline.

c. An operator at the ACS must have clear visibility of the Net Reel, Gallows, Gantry, forward edge of trawl ramp, the trawlway, and as much of the Working Deck as possible. The ACS must have direct visibility of the SCC.

d. [NECP 001]The port and starboard bridge control stations must be located to permit essentially unobstructed visibility from ahead to astern with a view of the water abeam at the waterline. [NECP 001] The starboard bridge control station must have visibility of the Side Sampling Station and the water immediately outboard thereof.

Forward and aft exterior access from the Bridge must be provided. Internal access to the Bridge from the level below must be provided. This access must have a door at the bottom of the ladder well, equipped with a red/white light control switch for the adjacent passageway.

Aft Working Deck. - The Aft Working Deck must be located aft on the Main Deck, and must include a centerline trawl ramp and trawlway, and fixed and portable equipment required in Section 591. The Aft Working Deck must have a minimum clear area of 165 m^2 and a minimum length from the top of the trawl ramp to the net reel of 14.3 m. Ship service air, seawater, fresh water, electric power and communication services must be provided to the Aft Working Deck.

Side Sampling Station. - Weather deck area on the starboard side, contiguous with the Hydrographic Laboratory and Wet Laboratory, must be provided for over-the-side operations of two hydrographic winches and one drop target strength winch with a rotating A-frame and three associated sheaves. A Side Sampling Station Control Booth must be provided on the 01 Level, forward of the A-Frame, outfitted with controls and communications as detailed herein. The Side Sampling Station Control Booth must be provided with light, heat and other standard habitability features required for a manned space.

Van Stowage Site. - [NECP 001]Space to secure an ISO 1CC van~~, 2430 mm by 6090 mm,~~ must be provided. The van must be oriented fore and aft. The van site must permit the use of an ISO 1D van ~~2430 mm by 3050 mm~~ when an ISO 1CC van is not used. [NECP 001] The van site must be clear of obstructions and sounding tubes, and must not block access routes. Services to the van must be provided with quick disconnect fittings located near the van site. Portable service cables and hoses must be provided and must be capable of being routed to the van without obstruction to access routes, other equipment or operations. ISO fittings must be provided to secure the van to the deck. The ship must have the ability to trawl with the van aboard.

Laboratories. - A Fish Laboratory, a Wet Laboratory, a Controlled Environment Room, a Dry Laboratory, an Autosalinometer Room, a Chemistry Laboratory, a Hydrographic Laboratory, an Acoustic Laboratory and a Computer Laboratory must be provided. Laboratory configuration must be in accordance with the Project Peculiar Documents. Laboratory spaces must be outfitted as specified in Section 667, and must be designed for ease of reconfiguration to accommodate differing mission requirements. Minimum required net areas for laboratories are as shown in Table 070-2.

Table 070-2. Minimum Laboratory Areas

Scientific Space	[NECP 001]**Minimum** Required Area [NECP 001]
Fish Laboratory	36.5 m^2
Wet Laboratory	31.5 m^2

Scientific Space	[NECP 001]**Minimum** Required Area [NECP 001]
Controlled Environment Room	9.0 m^2
Dry Laboratory	27.0 m^2
Autosalinometer Room	8.0 m^2
Hydrographic Laboratory	15.5 m^2
Chemistry Laboratory	21.0 m^2
Acoustic Laboratory	13.0 m^2
Computer Laboratory	30.5 m^2

The Fish Laboratory must have immediate access to the Aft Working Deck, to the Wet Laboratory and to the Side Sampling Station. The Fish Laboratory and the Wet Laboratory must be collocated.

The Controlled Environment Room must have immediate access to the Wet Laboratory.

[NECP 001]The Chemistry Laboratory must have immediate access to the Wet Laboratory and ready access to the ~~Hydrographic Laboratory and to the~~ Dry Laboratory. [NECP 001]

The Hydrographic Laboratory must have immediate access to the Side Sampling Station and ready access to the Dry Laboratory.

The Dry Laboratory must have ready access to the Hydrographic Laboratory and immediate access to the Autosalinometer Room.

[ECP 0002G]The Autosalinometer Room must have immediate access to the Dry Laboratory ~~via a vestibule~~[ECP 0002G].

[ECP 0001B]The Acoustic Laboratory must have ~~ready~~ immediate access to the Computer Laboratory. The Acoustic Laboratory and Computer Laboratory must be collocated. ~~Ready access to centerboard-mounted sonar transducer cabling is also required.~~

~~The Computer Laboratory must have ready access to the Acoustic Laboratory.~~ [NECP 001]~~The Acoustic Laboratory and Computer Laboratory must also have ready access to cabling from all sonar transducers and scientific electronic equipment.~~ [ECP 0001B] [NECP 001]

ET Shop. – [NECP 001]An Electronic Technician's workshop must be provided, ~~with a minimum area of 12 m^2,~~ outfitted in accordance with Section 665. [NECP 001]

Transducer Room. - Underwater transducers, except for the transducers mounted on the centerboard and the self-noise hydrophones, must be located in the Transducer Room. The Transducer Room must have a minimum clear height of at least one full deck and a minimum area of 17.5 m^2 and must be located on centerline, forward of the centerboard in an area which minimizes the effects of hull induced flow disturbance. Access to the Transducer Room must be from within the ship via a hatch or scuttle. Overhead access for transducer removal through the deck above must be provided. Means must be provided for installation and removal of transducers in this space while the ship is afloat.

[NECP 001]**IMU ~~Room~~Area.** - A dedicated ~~space~~ area for the Inertial Reference System Inertial Measurement Unit specified in Section 423 must be provided low in the ship over the Transducer Room. The IMU ~~Room~~ Area must provide access to the Transducer Room. [NECP 001]

Ready Room. - [NECP 001][ECP 0034C]A Fisherman's Ready Room ~~with a minimum area of 14 m^2~~ must be provided, ~~contiguous~~ with ready access to the laboratory area passageway and with ~~ready~~ immediate access to the aft Working Deck.[ECP 0034C] Seating must be provided for eight persons, and space must be provided for hanging and drying thirty sets of foul weather gear, with ventilation suitable for a wet space. A separate WR/WC ~~and a shower space~~ ~~[PA11]~~must be provided ~~adjacent~~ close to the Ready Room. [NECP 001]

Marine Mammal Observation Stations. - Marine Mammal Observation Stations must be provided on the top of the Bridge, port and starboard, open to the weather. The stations must be located in positions which provide unobstructed visibility of the horizon to the maximum extent, but no less than dead ahead to 120 degrees aft, with a view of the water as close to the ship as practicable. The stations must be safe from hazards created by antennas, topside equipment and exhaust gases. Each station must be 2.5 m^2 in area, equipped in accordance with Section 667.

Dive Locker. - [NECP 001]A Dive Locker ~~with a minimum net area of 7 m^2~~ must be provided. The Dive Locker must be located adjacent to the Working Deck or on the 01 Level with ~~ready~~ access to the Working Deck. [NECP 001] The space will be used for gear stowage, tank filling and as a dive air compressor operating space. An air intake terminating in space must be provided for the compressor, supplied from an external area not affected by exhaust gases.

Storerooms. - The following storerooms must be provided, outfitted in accordance with Section 672:

a. Scientific Stores with a minimum total volume of 170 m^3. [NECP 001]The Scientific Storeroom must be located in part below the Aft Working Deck and must be accessible by the ~~Aft Deck C~~crane. [NECP 001]

b. [NECP 001]Bosun's Stores with a minimum area of 13.9 m^2, located ~~in the foc'sle~~below the Aft Working Deck, accessible by the Aft Deck Crane. [NECP 001]

c. Engineer's Stores with a minimum area of 20 m^2.

d. [NECP 001]Frozen Galley Stores with minimum volume of 22 m^3, ~~located adjacent~~with ready access to the Galley.

e. Chilled Galley Stores with a minimum volume of 20 m^3, ~~located adjacent~~with ready access to the Galley.

f. Dry Provision Storeroom, with a minimum volume of 32 m^3, ~~located adjacent~~with ready access to the Galley. [NECP 001]

g. Steward's Stores, with a minimum area of 5.0 m^2.

h. General Stores, with a minimum area of 22 m^2. A portion of the General Stores area must be lockable.

i. A Scientific Freezer with a minimum interior volume of 11 m^3.

~~j.~~[NECP 001]~~A Paint Locker with a minimum volume of 7 m^3.~~ [NECP 001]

Damage Control Lockers. - Two damage control lockers must be provided, one forward and one aft, each with direct access to the weather. Minimum area for each locker must be 5.5 m^2 with a preferred area of 7.0 m^2. Damage control lockers must be outfitted in accordance with Section 664.

[NECP 001][PA12]**HAZMAT/Paint Stowage.** - A space for bulk stowage of scientific chemicals, ~~and~~ reagents, ~~and~~ chemically treated scientific samples and paint must be provided, with a minimum volume of 10 m^3. [NECP 001] [ECP 0003D]The HAZMAT Stowage space must be equipped with adjustable shelving and tiedown points, and must have the capability to maintain ~~a minimum stowage~~the space temperature ~~of~~ between 13^{0}C and 26^{0}C. High and low space temperature alarms must be provided at the Main Control Console and on the Bridge.[ECP 0003D]

Linen Lockers. - A minimum of one linen locker must be provided on each deck containing Staterooms.

Cleaning Gear Lockers. - A minimum of one cleaning gear locker must be provided on each deck containing Staterooms or Laboratories.

[NECP 001] Location and size of all spaces must be in accordance with the Project Peculiar Documents.[NECP 001]

070g. Electromagnetic Environmental Effects (E^3)

Radiators and receptors of electromagnetic energy and related electronics on the ship must be designed and installed to ensure electromagnetic compatibility (EMC) and to avoid hazards from electromagnetic radiation to personnel. Personnel at or enroute to normal operating stations, including the Marine Mammal Observation Stations, must not be exposed to electromagnetic energy in excess of the limits established in ANSI C95.1, “IEEE Standard for Safety Levels with Respect to Human Exposure to Radio Frequency Electromagnetic Fields, 3 kHz to 300 GHz.”

All HF transmit antennas must be installed with non-metallic personnel guards located so as to provide a minimum distance of 1200 mm horizontal and 2400 mm vertical separation from any working areas, manned stations, and personnel access areas. All areas within this region must be designated as hazard areas, by painting the deck, and provided with warning signs in accordance with ANSI C95.2, “American National Standard Radio Frequency Radiation Hazard Warning Symbol.” Areas outside this region that violate the safe levels as defined in ANSI C95.1 must be identified as personnel "no loiter areas." Warning signs must be provided to designate "no loiter areas."

Automated control systems, communication systems and scientific electronic systems must not respond spuriously to electromagnetic interference (EMI) from radiating sources or transients on power lines. Cables interconnecting power equipment items which utilize solid-state high frequency switching devices and cables which carry high amplitude pulses must be physically separated from more sensitive cables whose signal data would be distorted by induced interference. Table 070-3 provides minimum required cable separation distances. Cableway crossings must be as nearly perpendicular as practical with maximum practical separation. Cables must be routed within the ship structure and protected from electromagnetic radiation from on-ship transmitting antennas to the maximum extent practicable. All transducer cabling must be shielded.

Cables routed in topside areas exposed to the weather must be shielded. Shielding must be accomplished through the selection and use of shielded cable or by routing cable through shielding conduit. Shielding conduit must be rigid pipe, flexible metal hose, or enclosed wireways or trunks. Armored cable does not meet these shielding requirements. The outermost overall cable shield of shielded cables must be grounded at weather deck or weather bulkhead penetration points. Pipes, metal tubing and waveguides routed in topside areas must be grounded at deck or bulkhead penetration points. Tubing and pipes must be grounded by welding or by a

welded flange or must utilize the method specified for cable shield grounding. Waveguides must be grounded by replacing the weather flange gasket with an electrically conductive gasket.

Bonding and Grounding. - Large metal items attached by a low resistance connection to ship's hull are considered extensions of the ship hull and are at ground potential.

The following equipment must be bonded and grounded to ship's ground potential:

a. Equipment utilizing electrical power.
b. Fuel tanks and pipes.
c. Metallic standing rigging and masts.
d. Metallic cranes, hoisting gear, gantry and A-frame.
e. Removable metallic lifeline stanchions, liferails and ladders.
f. Water tanks.
g. Metal ducts.
h. Engines, rudder and rudder stock, main shaft, sonar trunks, centerboard and sea chests.
i. Resiliently mounted equipment must be bonded as described herein.

The outermost metallic surface of equipment connected to electrical power of 30 volts or more must be grounded. A third conductor in the power supply cable, a bond strap or a bracket must be used to ground electrical and electronic equipment installed on resilient mounts. Other electrical and electronic equipment is considered properly grounded if they have areas of metal-to-metal contact or installation bolts. Slide mounted or roller mounted equipment must be grounded by a conductor within the equipment cable harness.

Wherever possible, running rigging such as flag hoists, must be non-metallic. Metallic standing rigging must be bonded to ground potential through the use of bond strapping.

In each of the preceding grounding requirements, the resistance between each item or equipment and the ground point must not exceed a dc resistance of 0.1 ohm.

Bonding and grounding straps must be fabricated from braided cable. Lugs must be installed on each end of the cable to facilitate bond strap installation. Lugs must be selected to match the mating surface. Bond strap length must be the minimum necessary. Surfaces where bond straps and lugs are to be attached must be prepared for installation by cleaning to bare metal. Bond straps placed in topside areas must be weather sealed after installation by priming and painting the lugs and areas affected by welding or by coating the bolted lugs and associated hardware with weather sealing compound. Bond straps must not be painted.

Table 070-3. Cable Group Separation Distances (mm)

Cable Group Classification		A	B	C	D	E	F	G	H	I	J	K	L
A	Propulsion Cables	--	610	610	610	610	610	610	610	610	610	610	610

Cable Group Classification		A	B	C	D	E	F	G	H	I	J	K	L
B	Power & Lighting	610	--	50	100	50	100	305	460	460	460	460	610
C	Power & Lighting Control	610	50	--	100	50	100	305	460	460	460	460	610
D	Receiving Antenna Cables	610	100	100	--	50	50	305	460	460	460	460	610
E	TV/VHF Antenna Distribution	610	50	50	50	--	50	305	460	460	460	460	610
F	Telephone/ Audio Distribution	610	100	100	50	50	--	305	460	460	460	460	610
G	Sonar Transducer	610	305	305	305	305	305	--	460	460	460	460	610
H	HF Transmitter/ Coupler Cables	610	460	460	460	460	460	460	--	460	460	460	610
I	HF Coupler/ Antenna Waveguide Cables	610	460	460	460	460	460	460	460	--	460	460	610
J	VHF/UHF Transmitter Cables	610	460	460	460	460	460	460	460	460	--	460	610
K	Radar Transceiver Coaxial or Waveguide	610	460	460	460	460	460	460	460	460	460	--	610
L	Digital Data Bus	610	610	610	610	610	610	610	610	610	610	610	--

070h. Operating Environment

The ship must operate as required on any ocean and in the conditions of ice required for Ice Class C0. The ship and its subsystems must have full capability within the ranges of temperature and humidity listed in Table 070-4.

Structures not specifically addressed by the ABS Rules, such as masts and foundations, and equipment and machinery mounted on weather decks must be designed using standard AISC factors of safety to withstand all applicable loads, including the following:

a. **Wind Loading**: 146.5 kg/m^2 of projected area. Reduction of projected area because of heel must be neglected for vertical members.

b. **Snow and Ice Loading**: 36.5 kg/m^2.

Equipment and systems are not required to meet radiated and sonar self-noise requirements when exposed to snow and ice.

Supporting structure and foundations must be designed for a load transmitted as a result of a wave slap of 2,450 kg/m^2 acting on the projected area of that portion of equipment and machinery mounted on the weather deck beneath the line established for the hydrostatic head for weather deck design.

The front bulkheads and bulwark which act as wave barriers must be capable of withstanding a 4,900 kg/m^2 wave slap load.

Service Operation During Ship Motion in a Seaway. - Masts, staffs, foundations, superstructure and other structures and fittings must be designed to withstand dynamic forces produced by motion in a seaway. Stowed equipment and appurtenances must be secured to prevent damage from motion in a seaway.

Equipment and machinery systems must be capable of maintaining power and lubrication without loss of oil from machinery or hydraulic systems under the operating conditions required by the Regulatory Bodies.

Loads Due to Ship Motion. – Installations must withstand the effects of loads due to ship motion in storm conditions. These loads must include the dynamic effects of the ship's motion in a seaway, gravity effects and inertia effects, as calculated in accordance with DOD-STD-1399/301A of 21 July 1986.

Table 070-4. Operating Environment

WINTER	
Minimum Air Temperature	-18 degrees C
Minimum Seawater Temperature	-3 degrees C
SUMMER	
Maximum Air Temperature	
Dry Bulb	35 degrees C
Wet Bulb	28 degrees C
Maximum Seawater Temperature	32 degrees C

070i. General Requirements for Equipment, Machinery and Materials

Equipment, machinery and materials must be of good marine quality. Equipment, machinery and materials must be selected to ensure reliable ship operations for 6,500 hours of annual operation.

Equipment and replaceable parts must be standardized wherever practicable. Hull, mechanical, electrical and electronics items that can be maintained by the replacement of parts

must be supportable through commercial vendors. Systems must be designed to use the lowest practicable variety of types and sizes of multi-application items, such as valves, motors, fluids and controllers.

070j. Workmanship

Care must be taken to ensure fair lines, smooth surfaces, sound welding, and well-mated joints.

Plating must be fair, closely fitted, and free from buckles or uneven sight edges. Formed plates and shapes must be well-formed, and true to required alignment, shape or curvature. Where flanges are used for attachments, the faying edges must be free from hollows, and must be beveled. Shims may not be used to correct improper fit.

Design and finish of hull and the appendages thereon must be such that there is no cavitation at ship speeds up to the trial speed. All sharp edges, ridges, shell butts, etc. must be ground smooth. Faired edges must be applied to all intakes and discharges, particularly those for main and auxiliary seawater systems and the bow thruster. Bilge keel edges must be well radiused.

Sharp edges exposed to personnel must be dressed or ground. Use of fairing cement is prohibited unless approved in advance by the ConRep.

Construction details throughout must provide for service in seawater.

Safety guards must be installed over unprotected moving parts of rotating or oscillating equipment and machinery.

Partitions and coamings must be provided with rounded corners.

Piping, wiring, ducts and equipment must be located to preserve the appearance of living spaces without unnecessarily obstructing passageways or overhead height.

Corners and crevices where water and dirt may collect, and inaccessible void spaces must be avoided. Materials and construction in outfitting must be selected to minimize maintenance.

Hull Form. – The hull form must be in accordance with the Project Peculiar Documents. Final fairing and lofting of the hull form is the responsibility of the Contractor. Tolerances for the hull form as built must be as follows:

a. Waterlines: No more than 5 percent of the measured molded offsets may deviate by more than 10 mm or 1 percent (whichever is less) of the tabulated offset. No more than 1 percent of the measured offsets may deviate by more than 20 mm or 2 percent (whichever is less).

b. Buttock Heights: No more than 5 percent of the measured buttock heights may deviate by more than 10 mm or 1 percent (whichever is less) of the tabulated height. No more than 1 percent of the measured heights may deviate by more than 20 mm or 2 percent (whichever is less).

Reference Planes. - Longitudinal centers must be referenced to the forward perpendicular and vertical centers to a baseline parallel to the design waterline. Frame numbers must start at the forward perpendicular.

070k. Technical Documentation

Classification and Inspection Certificates. – Required Regulatory Body certificates must be prepared. Documentation required by 33 CFR 164.35 must be provided on the bridge.

Endurance Fuel Calculations. - Endurance fuel calculations must be prepared in accordance with SNAME Technical and Research Bulletin No. 3-49 Marine Diesel Power Plant Practices.

Maneuvering Performance Prediction. - The Contractor must prepare a maneuvering performance prediction. The analysis must identify the methodology used, and must include a summary of predicted performance for each maneuvering condition. Input data and output files for each prediction must be included.

Seakeeping Analysis Report. – A seakeeping analysis report must be prepared. The analysis must identify the methodology used, and must include a summary of predicted performance at each required location for each environmental condition. Input data and output files for each prediction must be included.

Register of Lifting Appliances. – A Register of Lifting Appliances for all lifting appliances and lifting gear must be prepared by ABS upon satisfactory proof testing after installation, and must include certificates and reports.

071 ACCESS

Passageways must have a clear width of at least 900 mm. Access routes must be kept clear of items that restrict passage or are a source of danger to personnel.

Headroom must be 2200 mm wherever practicable. Headroom in walking and working areas must be a minimum of 2100 mm, except that headroom in doors and arches may be a minimum of 2000 mm. [NECP 001] In congested areas such as machinery spaces, specific instances where headroom is less than 2100 mm may be approved by the ConRep. [NECP 001]

073 NOISE, VIBRATION AND RESILIENT MOUNTINGS

073a. General

This section specifies the work required by both the Contractor and the Government to ensure the ship meets specified underwater radiated noise, sonar self-noise and airborne noise requirements. The responsibility for noise control shall be assumed by the Contractor, with the exception of several items for which the Government assumes responsibility, as described herein.

The Contractor must employ the services of a professionally recognized noise control engineering firm for development and monitoring of the noise control design to be incorporated in the vessel to ensure that the airborne noise, sonar self-noise and radiated noise performance requirements are met. The noise control engineering firm must review all analyses and drawings which contain noise control features prior to the Contractor's submittal of such documentation to the Government and installation on the ship.

The Contractor and noise control engineering firm are responsible for the following:

a. Establishing and maintaining a noise control program as defined herein.

b. Incorporating specified noise control measures and features into the detail design. The Contractor must prepare corrective action reports to document actions taken in response to Government drawing and design review comments.

c. Implementation of the hull and propeller designs as provided in the Project Peculiar Documents.

d. Procuring CFM that meets structureborne and airborne noise criteria, including development of equipment airborne and structureborne noise performance requirements to be invoked in procurement specifications for CFM.

e. Designing, selecting and installing machinery systems in such manner that the measured levels for underwater radiated noise, sonar self-noise and airborne noise do not exceed the levels specified herein.

f. Ensuring that noise critical machinery is properly identified, inspected, tested, handled, shipped, stored, assembled and installed. The contractor is responsible for ensuring factory noise acceptance tests and shipboard noise tests are conducted on all noise critical equipment, including the items listed in Table 073-4.

g. Developing and implementing inspection procedures to ensure noise critical machinery and equipment is installed in accordance with approved detail design drawings with particular emphasis on noise control features.

h. Developing and implementing training programs for engineering and production employees to ensure they understand the requirements for design and construction of an acoustically quiet ship.

i. Operating the ship's systems, machinery and equipment during sonar self-noise surveys and underwater radiated, airborne and structureborne noise surveys as described herein.

The Government is responsible for the following:

a. That portion of the total underwater radiated noise signature attributed to the hull and propeller designs.

b. Reviewing drawings, purchase orders, test procedures, inspection procedures and other documentation prepared by the Contractor as specified herein.

c. Witnessing, at the discretion of the Government, in conjunction with the Contractor, pre-installation machinery noise tests of diesel generators, electric propulsion motors and other factory noise tests.

d. Reviewing manufacturers' noise and vibration test data for noise critical machinery and equipment.

e. Auditing the fabrication and installation of all features affecting noise during construction.

f. Attending quarterly noise control program review meetings with the Contractor to evaluate noise control efforts, determine the status of any deficiencies and develop plans for action to correct such deficiencies.

g. Monitoring and participating in airborne, structureborne, sonar self-noise and underwater radiated noise surveys as specified herein.

073b. Definitions

The following definitions are provided:

A-Weighted Sound Pressure Level (dBA). - The frequency weighted sound pressure level obtained with a sound level meter set to A-weighting.

Acceleration Level. - The acceleration level in decibels is 20 times the logarithm to the base ten of the ratio of the root mean square (rms) acceleration of the vibration of interest to the reference acceleration. For this specification, the reference acceleration is 10^{-3} cm/sec^2.

Compound Mounting/Intermediate Mass. - Compound mounting refers to a sound isolation system that has two sets of isolation mounts in series but isolated from each other by an intermediate mass. The purpose of the intermediate mass is to improve the overall mount effectiveness of the isolation system. The design of the intermediate mass structure must be such that it maintains the alignment and stability of the mount/machinery system under all static and dynamic loads incurred during normal ship operation.

Foundation. - Structure which is placed between machinery, equipment, distributive systems (piping, vent ducts, etc.), and major/primary ship structures such as decks or hull stiffeners. For noise critical machinery this structure is placed between the resilient mounts of the sound isolation system and major/primary ship structures such as decks or hull stiffeners. The purpose of the foundation is to maintain alignment of machinery and equipment and resilient mounts under all ship operating conditions and motions and to properly support the design of the resilient mounts of the sound isolation system (provide proper termination impedance).

Noise Critical Systems. - Noise critical systems are those ship systems which, in the absence of significant noise control measures, represent a high risk to the achievement of the ship's underwater radiated noise, airborne noise and sonar self-noise requirements. They are identified to ensure that special noise control measures are implemented in design, procurement, construction and installation.

Radiated Noise. - The ship's radiated noise is the acoustic energy radiated into the sea by sources originating within or at the ship. These sources include machinery noise transmitted to the hull/water interface, machinery and flow noise carried by sea connected piping systems to the sea, and hydrodynamic noise caused by the interaction of the ship hull, propeller and appendages with the sea. Radiated noise is measured by having the ship pass a calibrated hydrophone array, which senses the sound radiated by the ship and measures the distance between the ship and the array. The radiated noise level is then converted to that which would be sensed at 1 meter radius from an equivalent point source and is normally expressed as sound pressure level in decibels re: 1 microPascal (μPa) for specified frequency bandwidths and frequency ranges.

Sonar Self-Noise. - The ship's sonar self-noise is the acoustic energy contained within the sonar signature that originates from sources within or at the ship. These sources include machinery noise, flow noise and hydrodynamic noise caused by the interaction of the ship hull, propeller and appendages with the sea. It is measured by sensors contained within the sonar enclosures and calibrated to a noise level (Ln) at the face of the sensor. The values are normally expressed in decibels re: 1 μPa for specified frequency bandwidths and frequency ranges.

Sound Isolation. - A system of low frequency vibration isolators that are placed between noise sources (noise-critical machinery and equipment) and subbases, shipboard foundations or piping and ventilation duct systems. Isolators may also be installed between portions of noise-critical piping or ventilation ducting systems and their supporting structures or foundations. The purpose of the sound isolation system is to prevent the structureborne vibration within the noise-critical machinery, equipment, piping or ducting from being transmitted to other structures and to the hull.

Sound Pressure Level. - The sound pressure level in decibels is 20 times the logarithm to the base 10 of the ratio of the root-mean-square (rms) pressure of the sound of interest at a given location to the reference pressure. For airborne sound pressure level, the reference pressure is 20 μPa, which equals 0.0002 dynes/sq-cm. For underwater radiated sound pressure level, the reference pressure is 1 μPa at a distance of 1 meter.

Sound Short. - A sound short is defined as the mechanical contact of any portion of a noise critical system, down to and including the resilient mounts, with any other structure or system under any operating conditions. To prevent sound shorts, adequate clearance between sound isolated systems and structure must be provided.

Structureborne Noise. - The structureborne noise level of a unit of machinery is the vibration level of the unit under specified conditions (usually rated load for a constant speed machine). The vibration level is measured by accelerometers attached near the feet of the unit above low frequency mounts and is expressed in decibels re: 10^{-3} cm/sec^2 for each frequency band of interest.

073c. ICES Radiated Noise Standard

The International Council for the Exploration of the Sea (ICES) has adopted an underwater radiated noise standard for fisheries research vessels defined in ICES Cooperative Research Report No. 209, Underwater Noise of Research Vessels. This noise standard, which is required to be met in calm water at ship speeds up to and including 11 knots, is:

a. 135 - 1.66 log f Hz from 10 Hz to 1 kHz (based on a mean level of 132 dB re: 1 μPa (1 Hz bandwidth) at 1 m from 20 Hz to 1 kHz)

b. 130 - 22 log f kHz from 1 kHz to 100 kHz (re: 1 μPa (1 Hz bandwidth) at 1 m).

[NECP 001]Compliance with this standard will be assessed with all main propulsion and propulsion auxiliary machinery, all normally operating hotel services~~ such as refrigeration and HVAC systems~~, and all navigational and scientific instrumentation systems in operation. [NECP 001]

073d. Sonar Self-Noise Requirement

A scientific sounder target detection capability must be provided such that at 38 kHz:

a. A -60 dB target at 150 meters depth can be detected with a signal-to-noise ratio of 10 dB at ship speeds up to and including 11 knots in sea state 2, with an echosounder bandwidth of 3.8 kHz.

b. A -60 dB target at 500 meters depth can be detected with a signal-to-noise ratio of 6 dB at a vessel speed of 0 knots in sea state 0, with an echosounder bandwidth of 380 Hz.

The multibeam imaging sonar self-noise must not exceed 47 dB re: 1 μPa (1 Hz spectrum level), for all operating conditions.

073e. Sonar Self-Noise Design Features

The Contractor must incorporate the following design features, as a minimum:

a. Sonar transducers must be arranged to minimize interference associated with local flow noise.

b. [NECP 001]All hull appendages including the centerboard, sonar transducers and their housings, and the hull within 3000 mm of sonar transducers must be cavitation free, aligned with water flow and fair within 3 mm over any 600 mm span and must have a ~~0.0635 mm~~smooth finish when painted. [NECP 001] Fairness must be measured at the first drydocking after launch.

c. Within 6000 mm of sonar receive transducers, all piping and ducting, except in fuel tanks, must be supported by resilient hangers and air flow in ducting must not exceed 10.0 m/s.

d. [NECP 001]Piping ~~penetrations~~ for fluid systems must be ~~located at least 6000 mm~~routed as far from sonar receive transducers as practicable, and must be damped to assure that the performance of the transducers is not compromised~~or at least 3000 mm if the structural path to the sonar from bulkhead penetration and pipe is damped~~. [NECP 001] The type and amount of damping treatment required must be specified in the Noise Control Program Plan to ensure that the required degree of acoustic performance is achieved.

e. The bow thruster inlet and discharge openings must be designed to be cavitation free and to minimize turbulence at the sonar transducer locations. The design must prevent the accumulation of air in the thruster.

f. Hull openings for main sea suctions and discharges must be located at least 9000 mm from all sonar transducers. Except for the bow thruster openings and uncontaminated seawater system intakes, all sea connectors and underwater shell openings must be aft of the sonar transducers.

g. Orifices and other flow control devices for fluid systems must be located a minimum of 6000 mm from sonar receive transducers.

Self-Noise Hydrophones. - Three wide band omni-directional hydrophones, **Harris Acoustic Products Corp., Model HAP-5050,** or equal, covering a frequency range of 50Hz - 50kHz, must be provided for own-ship noise monitoring purposes. One omni-directional hydrophone must be located in the centerboard, within 1000 mm of the scientific sounder transducers. The hydrophone must be located such that it does not interfere with the acoustic performance of any mission sensor in the centerboard. One omni-directional hydrophone must be installed in a floodable void or tank, above and within 1000 mm of the propeller. One omni-directional hydrophone must be installed in the Transducer Room. The cabling for the hydrophones must be terminated in the Acoustic Laboratory.

073f. Airborne Noise

Airborne noise in ship compartments and at manned deck stations must be consistent with recognized standards for hearing conservation, speech communication, and habitability. NVIC No. 12-82 and IMO Resolution A.468(XII), "Code On Noise Levels On Board Ships," were used to derive the requirements contained herein.

Airborne noise performance requirements are applicable during normal ship operation at 13.5 knots, during trawling and during stationkeeping, while normal propulsion, auxiliary and mission related equipment and machinery are operating simultaneously at rated conditions. Special attention must be given to frequently used items such as galley equipment that may constitute annoyance problems (such as Gaylord hoods) while not actually exceeding specification levels.

Airborne noise requirements in shipboard spaces and at manned deck stations must not exceed the A-weighted airborne noise limits in Table 073-1. Spaces not listed in Table 073-1 must have the same airborne noise category as a similar, listed space. Noise level measurements must be taken after the ventilation systems are balanced and operating at proper flow rates.

Hearing protection signs must be affixed in compartments and deck areas where airborne noise levels exceed 84 dBA.

Roll Stabilization Tank. - The Contractor must minimize the effects of noise produced in the roll stabilization tank. The entire interface area between the tank and adjacent spaces must be insulated with Type III acoustic insulation as defined herein.

Airborne Noise Analysis. - [NECP 001]An airborne noise analysis must be performed in accordance with SNAME Technical and Research Bulletin No. 3-37 or Noise Control Engineering, Inc.'s ASAP program to demonstrate that the airborne noise acceptance levels will be met at each of the ship operating conditions described herein. [NECP 001] Airborne noise analysis reports must be prepared. Additional airborne noise control measures, including airborne noise performance requirements for individual units of machinery and equipment, must be established based on the airborne noise analysis.

Table 073-1. Airborne Noise Acceptance Levels For Ship Spaces

Space	(A-Weighted Sound Pressure Levels in dB re: 20 μPa)
Bridge	65
Conference Room	65
Staterooms	60
Offices	65
Laboratories, Controlled Environment Room, Autosalinometer Room	65
Side Sampling Station Control Booth	65
ET Shop	65
Lounge, Crew Ready Room	65
Messroom	65
Passageways	65
Hospital	65
Galley	75
Exercise Room	75
Working Deck (Note 1)	75

Space	(A-Weighted Sound Pressure Levels in dB re: 20 μPa)
Storerooms	85
HVAC Machinery Space	90
Enclosed Operating Station	75
Main Machinery Room	110
Auxiliary Machinery Room	110
Bow Thruster Machinery Room	110

Note 1: The Working Deck includes the entire aft working deck, 01 level aft, side sampling station, rescue boat operating station, anchor handling station, deck crane control location, and marine mammal observation stations.

073g. Mechanical Vibration

The ship and all ship components must be free from excessive vibration. Vibration is excessive when it results in damage, or danger of damage to ship structure, machinery, equipment or systems, or when it interferes or threatens to interfere with the proper operation of any ship component. Vibration is also excessive when it threatens to interfere or interferes with personnel safety, comfort or proficiency, or with scientific operations.

The Contractor must correct any unsatisfactory conditions resulting from the excitation of a natural frequency in any CFE caused by the propeller or other exciting force.

Hull girder, masts, above-deck structures and the superstructure vibration must be below the Zone III threshold as defined in SNAME Technical and Research Bulletin No. 2-25. Longitudinal, torsional and lateral propulsion shafting vibration must meet the acceptability constraints of Sections 3, 4 and 5 of SNAME Code C-5. Analyses must be performed by the Contractor during design and after construction to assess vibration of the hull girder, masts, gantry, cranes, other above deck structures and the superstructure.

The Contractor must perform vibration analyses during design and as necessary [PA13]after construction to ensure the propulsion system vibration requirements are met.

073h. Resilient Mounts

Low frequency resilient mounting systems must have natural frequencies, in all vibrational modes, that are lower than one half of the rotational, electrical, bearing, and vane fundamental frequencies generated by the mounted machinery.

Selection and design of resilient mounting systems must be such that the six natural frequencies of the systems do not coincide with hull critical frequencies that fall within the range of propeller blade rate excitation at or above 50% of ABS rated horsepower, or any exciting frequencies of equipment; nor may these natural frequencies coincide with the exciting frequencies of the mounted equipment unless specifically approved by the government. For purpose of this calculation, the foundation must be assumed to be rigid.

For resiliently mounted equipment, the design of the foundation must be such as to assure that the foundation stiffness is at least 10 times that of the associated resilient mounts. Foundations for isolated equipment, including but not limited to resilient mounts and DIM, must be damped with damping material as specified by the noise control engineering firm. Selection of the

material must be such that the material provides performance at the excitation frequencies of the mounted component(s).

Foundations supporting resiliently mounted machinery and equipment must not utilize open truss type structures unless adequate direct support for each resilient mount is provided. Foundation systems designed and qualified as open truss type structures and approved by the Government may not be cut or altered to accommodate piping or electrical cable interferences unless specifically approved by the Government.

Although the Contractor is not constrained to use U. S. Navy qualified resilient mounts, the following resilient mount military and commercial specifications are listed for reference purposes:

a. MIL-M-17185 - General specification for resilient mounts
b. Metalastik Vibration Control Systems D Series mountings
c. MIL-M-19379 - Specification for resilient mounts 11M15, 11M25, 10M50
d. MIL-M-17508 - Specification for resilient mounts 6E100, 6E150, 7E450, 6E900, 6E2000
e. MIL-M-19863 - Specification for resilient mounts 5B5000H
f. MIL-M-21649 - Specification for resilient mounts 5M10000H
g. MIL-M-24476 - Specification for pipe hanger mounts 7M50, 6M150, 6M450, 6M900, 6M2000
h. ZZ-R-768 - Specification for unbonded spool pipe hanger mounts

The Contractor must identify the resilient mounts to be used in each application, including mount static load deflection and dynamic stiffness properties in the principal orthogonal axes.

[NECP 001]Resilient mounts must be installed in accordance with the intent of NAVSEA Resilient Mount Handbook [NECP 001] [ECP 0005](NAVSEA S9073-A2-HBK-010~~0900-LP-089-5010~~). Connections to and clearances about resiliently mounted equipment must also be in accordance with the Resilient Mount Handbook. Installation of resilient mounts not covered by NAVSEA S9073-A2-HBK-010~~0900-LP-089-5010~~ must be in accordance with instructions approved by the noise control engineering firm. [ECP 0005]

073i. Acoustic Enclosures and Treatments

Enclosures. - Where use of enclosures is determined to be necessary, guidance for the design of enclosures is contained in USCG Tech. Pub. 073-0100, “Handbook for Shipboard Noise Control,” February 1974. Enclosures must be sized to allow for maximum deflection of the mounted units without mechanical contact and must be arranged to allow easy access to all areas on the units requiring inspection or maintenance. They must be designed for ease of disassembly to permit major work on the units. Acoustic panels must not exceed 22 kg and shall be sized so they can be moved by one person.

Penetrations in enclosures for piping and electrical connections to the enclosed unit must be airtight. Such penetrations must not destroy the integrity of the acoustic treatment facing. Air inlet silencers must be fitted on each enclosure. Double glazed windows must be installed to provide a clear view of the enclosed unit to monitor its operation, gages and other sensors.

The enclosure for the diesel generators must be the entire diesel generator space. The diesel generator space must be acoustically treated in accordance with analyses done by the

contractor's noise control engineering firm to ensure that both airborne and underwater radiated noise requirements are met. Individual enclosures for each diesel generator are not required solely to meet airborne noise requirements. Enclosures may not be provided unless determined necessary by the noise control design to meet underwater radiated noise requirements.

Acoustic Treatment. - Acoustic treatment must be installed throughout the ship as determined necessary by the noise control design to meet the airborne noise level requirements of Table 073-1, the underwater radiated noise and sonar self-noise requirements contained herein. Floating decks may not be provided in the Fish Laboratory, Wet Laboratory or Chemistry Laboratory.

All acoustic treatments used must possess all necessary regulatory body approvals. The surfaces of acoustic treatments must be painted as specified in Section 631, except that Type II acoustic absorptive treatment may not be painted. Acoustic treatments other than those described below may be used as approved by the Government. Approved types of acoustic treatments are described below:

a. Type I acoustic absorptive treatment must be used, except in food preparation spaces, machinery spaces or other spaces subject to oil, water or vapors. Type I acoustic absorptive treatment must consist of perforated face acoustic board with the following coefficients of sound absorption when tested in accordance with ASTM C 423, "Sound Absorption and Sound Absorption Coefficient by the Reverberation Room Method":

Frequency (Hz)	125	250	500	1000	2000	4000
Coefficient	0.25	0.70	0.90	0.85	0.75	0.75

Type I acoustic absorptive treatment facing must be suitable for painting.

b. Type II acoustic absorptive treatment must be used in food preparation and consumption spaces, machinery spaces and other spaces where the treatment may be exposed to oil, water, or vapors. Type II treatment must consist of incombustible board with a fire-, oil- and water-resistant facing with the following coefficients of sound absorption when tested in accordance with ASTM C 423, "Sound Absorption and Sound Absorption Coefficient by the Reverberation Room Method":

Frequency (Hz)	125	250	500	1000	2000	4000	NRC
Coefficient	0.43	0.96	1.00	0.70	0.51	0.35	0.80

In heavy traffic and work areas, the Type II treatment must be protected by perforated aluminum sheathing. Type II treatment must be installed external to any other treatment on plane surfaces and must be the treatment exposed to the airflow in ducts. Type II treatment must not be painted, and must be marked as follows:

NOISE CONTROL SURFACE

DO NOT PAINT

The marking must be accomplished with a stencil on the face of the Type II treatment. Stencils must be located at 1500 mm intervals on a level 1800 mm above the deck.

c. Type III high transmission loss treatment must be applied to bulkheads and overheads to enhance noise isolation. Type III high transmission loss treatment must consist of two layers of incombustible acoustic board separated by a wire reinforced lead septum. The first layer must consist of incombustible board installed directly against the ship structure. The first layer must have the following coefficients of sound absorption when tested in accordance with ASTM C 423, "Sound Absorption and Sound Absorption Coefficient by the Reverberation Room Method":

Frequency (Hz)	125	250	500	1000	2000	4000	NRC
Coefficient	0.15	0.40	0.75	0.75	0.75	0.70	0.66

The septum material must consist of a layer of wire reinforced lead, 150 dB loss, with a weight of approximately 7.3 kg/m^2. The second acoustic board layer must consist of Type I acoustic absorptive treatment or Type II acoustic absorptive treatment, as required by the specific application.

d. Type IV acoustic absorptive treatment must be used as overhead lay-in panels in conjunction with overhead sheathing grid systems. Type IV acoustic absorptive treatment must consist of acoustic panels adhered to 3 mm thick corrugated and perforated aluminum. Panels must have the following coefficients of sound absorption when tested in accordance with ASTM C 423, "Sound Absorption and Sound Absorption Coefficient by the Reverberation Room Method":

Frequency (Hz)	125	250	500	1000	2000	4000
Coefficient	0.07	0.25	0.70	0.90	0.75	0.70

Seams of both Type I and Type II acoustic absorptive treatments must be covered with 50 mm wide tape as recommended by the manufacturer. Exposed edges of insulation must be sealed with adhesive when installed on the overhead.

Type I or Type II acoustic insulation must be installed on the overhead and bulkheads of all spaces to meet the noise requirements of Section 073.

Type II acoustic absorptive treatment must be installed on the noise producing side of boundaries separating machinery spaces and workshops from living and messing spaces. Wherever acoustic absorptive treatment is indicated for compartment bulkheads, doors in those bulkheads must not be covered.

Only Type II acoustic absorptive treatment must be installed in machinery spaces and in spaces such as the plenum chambers into which machinery space exhaust systems discharge and where exposed absorptive treatments could act as collectors of combustible materials.

Type I or II treatment on the warm side of vertical surfaces bounding uptake enclosures and ready services spaces must extend from deck to the overhead, and must be installed behind a deck coaming. In all other areas, Type I or II treatment on vertical surfaces must extend from 150 mm above the deck to the overhead, and the lower exposed edges must be sealed with 100 mm wide tape.

All seams in the septum and inner and outer layers of Type III transmission loss treatment must be sealed with 50 mm wide tape as recommended by the manufacturer. All penetrations, to include studs, must be sealed with sealing compound. Seams in the wire reinforced lead layer of Type III transmission loss treatments must overlap a minimum of 75 mm.

Type III treatment must extend from the deck to the overhead. A coaming must be installed on the deck and the transmission loss treatment installed behind the coaming. Where no other insulation is specified at the boundary of the Type III treatment, the Type III treatment must be extended 300 mm beyond the indicated boundary on bulkheads and overheads. When other insulation is specified at the Type III treatment boundary, the wire reinforced lead septum must be extended 300 mm beyond the boundary on the bulkheads and overheads.

Where Type III treatment must be installed in wet spaces such as showers, washrooms and waterclosets, it shall be sheathed with polished CRES, 14 gage minimum. Fasteners for securing the sheathing must be isolated from the treated bulkhead.

Where Type III insulation is required, it must be installed behind status boards, control or switching panels, or equipment mounted on bulkheads, unlike Type I or II treatment. Exposed edges of acoustical treatment around air ports, doors and other locations where such edges are subject to damage must be protected by light "Z" or flat bars. Exposed edges not subject to damage must be protected with tape as recommended by the manufacturer.

Type IV treatment, where required, must be installed as lay-in panels (in lieu of sheathing panels) in a sheathing grid system.

Liquid System Treatments. - System flow velocities must be minimized. Piping design must minimize flow discontinuities in systems and use large radius elbows to reduce flow turbulence.

Orifices in noise critical systems may not produce pressure drops greater than 2.8 kg/cm^2. Orifices in liquid systems may need to be of the multistage type to meet noise requirements. An additional control for noise generated by liquid throttling is the cladding of the piping in and around the noise source area with high transmission loss acoustic materials. All orifices and pressure reducing valves must be identified and included in the Contractor reports submitted as part of the Noise Control Program.

Flexible piping connections must be used to provide piping flexibility and to decrease transmission of noise through piping connected to resiliently mounted equipment. [NECP 001] Flexible hose and associated equipment end fittings must be ANSI (non-metric) thread size.[NECP 001]

[NECP 001]Where resilient pipe hangers are used to support flexible connections to resiliently mounted equipment, the resilient elements must conform to MIL-M-24476, ~~or~~ MIL-M-17508 or MIL-M-19379 (BB configuration or equivalent only).[NECP 001]

[NECP 001]Resiliently mounted pipe hangers in accordance with NAVSHIPS 0948-LP-063-9010, “Noise Isolation Pipe Hanger Design Handbook” must support piping to resiliently mounted equipment, except that pipe hangers need not be designed for shock. [NECP 001] These hangers must be installed from the resiliently mounted unit to the first rigid connection, such as a watertight bulkhead, deck or hull penetration. Components mounted on DIM do not require flexible piping connections if adequate piping flexibility can be demonstrated.

All flexible piping connections must be identified and included in the Contractor reports submitted as part of the Noise Control Program.

Hull and Foundation Damping. - The hull, forward and aft bulkheads and underside of platforms in the Main Machinery Room must be damped by damping tiles, MIL-PRF-23653, Class 2, 13.7 kg/m^2, with nominal 6.4 mm steel constraining layer. The damping material must be

applied following the procedures given in NAVSHIPS 0939-000-1010, Vibration Damping Materials - Procedures For Installation, Maintenance, And Repairs. The hull and bulkheads must be damped from the keel to 500 mm above the full load water line. Any acoustic or thermal treatment required in addition to the damping tiles must be applied over the damping tiles in the Main Machinery Room. In this case, the final layer of any required Type III treatment must consist of Type II acoustic treatment in lieu of the specified incombustible board. Type III treatment may not be applied in the bilges.

The diesel generator and the propulsion electric motor foundations must be damped with MIL-PRF-23653 Class 2 damping tiles. The surface density of the tiles (13.7 or 22.0 kg/m^2) and thickness of the constraining layer, if any, must be as determined by Sections 3.2 and 4.4.1 of NAVSHIPS 0939-000-1010. Areas of the diesel generator and electric motor foundations required to be damped by NAVSHIPS 0939-000-1010 may be left undamped if such damping interferes with the installation of the mounting system.

DIM Mounts. – DIM mount design and installation, except as specifically called for herein, must be in accordance with the DIM Mount Design Handbook (NAVSEA S9073-AA-HBK-010/DIM).

Flexible Hoses. – Flexible hose assembly design and installation must be in accordance with the Technical Directive for Piping Devices, Flexible Hose Assemblies (NAVSEA S6430-AE-TED-010). [NECP 001]For flexible hose installations greater than 65 mm in diameter, General Rubber Type 1015 expansion joints may be used. [NECP 001] Hose assemblies must be tagged.

073j. Diesel Generator Performance Requirements

The diesel generator sets must be individually compound-mounted with intermediate masses designed to behave as a rigid mass up to at least 100 Hz. Four individual masses must be provided for each diesel generator set, with one mass located at each corner of the subbase. The combined weight of the four intermediate masses under each diesel generator set must have a total weight equal to or greater than 0.4 times the weight of the diesel generator set, including subbase.

The first and second stage resilient mounts must be selected such that all mounts are within their maximum rated load limits and the vertical translational resonant frequency of the intermediate masses is equal to, or less than, 12.3 Hz. The Contractor must demonstrate via measurement or Government-approved calculation that the intermediate masses behave as a rigid mass at all frequencies below 100 Hz.

The locations of the mounts on the masses must be such that the resonant pitch and roll frequencies of the intermediate masses do not coincide with any of the exciting diesel generator tones. Figure 073-1 conceptually depicts how the resilient mounts should be oriented on each side of one of the intermediate masses (eight mounts for each mass). Four masses for each diesel generator set will be required.

Figure 073-1. Intermediate Mass Concept

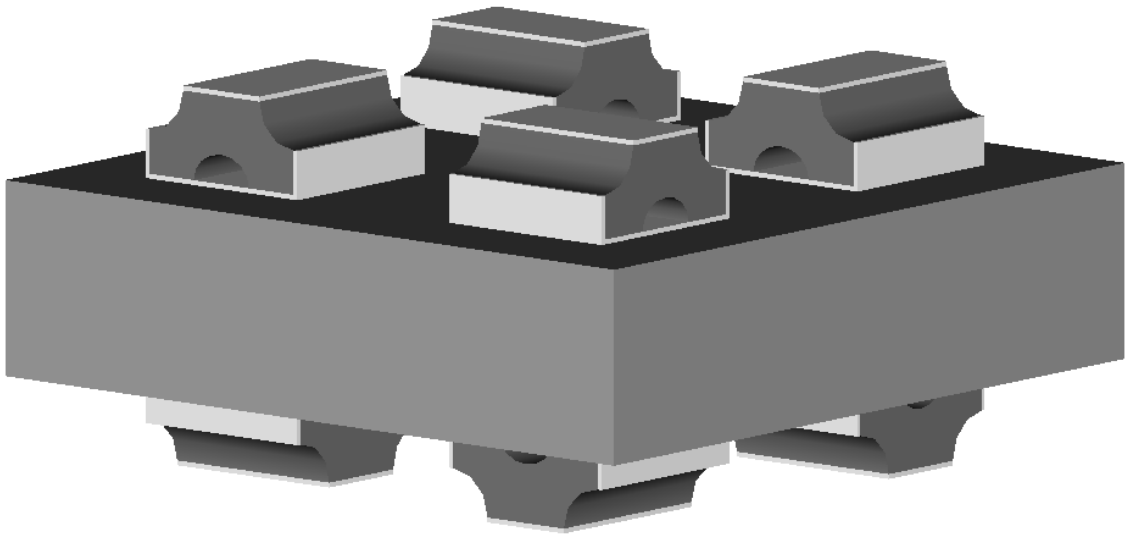

The diesel generator set vibration levels (1 Hz bandwidth) may not exceed those listed in Table 073-2. These levels must be measured on the subbase, above the compound mounting system (above mounts) at each corner of the diesel generator sets, operating under load, in accordance with MIL-STD-740-2. A straight-line interpolation between the points listed in Table 073-2 must be used to establish vibration levels at intermediate frequencies.

The noise control engineering firm must perform the required structural acoustics analyses of the diesel generator mounting systems. These analyses must establish the intermediate mass vibration criteria to ensure that the underwater radiated noise requirement is met. These intermediate mass criteria must be provided to the government prior to factory acceptance testing of the diesel generator sets. The contractor must conduct factory acceptance tests (FAT) on all four diesel generator sets and their compound mounting systems prior to installation in the ship to ensure that both the above mount vibration criteria provided in Table 073-2 and the intermediate mass vibration criteria established by the noise control engineering firm are not exceeded. The intermediate mass system need only be tested on the lead ship's diesel generator sets. Diesel generator above mount vibration levels must be measured for all ships. The diesel generator set FAT measurement results must be provided to the government for review prior to installation of the diesel generator sets in the ship.

Table 073-2. Maximum Diesel Generator Set Above-Mount Vibration Levels

Center Frequency (Hz)	AdB re: 10^{-3} cm/sec^2
10	69.6
12.5	61.0
16	76.4
20	88.9
25	96.5

Center Frequency (Hz)	AdB re: 10^{-3} cm/sec^2
31.5	101.5
40	109.8
50	112.9
63	120.9
80	126.4
100	131.0
125	135.0
160	135.0
200	135.0
250	135.0
315	135.0
400	135.0
500	135.0
630	135.0
800	135.0
1000	135.0
1250	135.0
1600	135.0
2000	135.0
2500	135.0
3150	135.0
4000	135.0
5000	135.0
6300	135.0
8000	135.0
10000	135.0

073k. Electric Propulsion Motor Performance Requirements

As part of detail design, the Contractor and noise control engineering firm must conduct an analysis to determine the type of mounting system required for the propulsion electric motor, including any necessary Isomode-type distributed isolation material (DIM), and/or flexible sound isolation propulsion shaft coupling. The vibration levels (1 Hz bandwidth) measured on the feet of the motor (above mounts) when operating loaded at powers required for ship speeds up to and including 11 knots, may not exceed those given in Table 073-3. Table 073-3 was developed assuming a motor hard mounted in the ship, operating at up to 2,250 kW and 134 r/min. A straight line interpolation between the points listed in Table 073-3 must be used to determine vibration levels at intermediate frequencies. If a mounting system other than hard mounted is determined necessary by the Contractor's analysis, the Government must be presented with a recommended mounting system design.

The contractor must conduct factory noise testing of the propulsion electric motor in accordance with MIL-STD-740-2 prior to installation into the ship to ensure that the vibration limits

of Table 073-3 are met. Factory testing must be accomplished with the motor operating at 1,050 kW and 95 r/min, in addition to full power testing.

The manufacturers of the specified DC electric motors in Section 235 have previously demonstrated capability and provided acceptable acoustically quiet DC electric propulsion motors. Although the make and model number is specified, and the acoustic features that are designed to reduce fundamental noise associated with electric motors are inherent to that make and model, the shipbuilder and its vendor are responsible for compliance with the vibration requirements herein. Any alternative DC propulsion motor proposed by the shipbuilder must be designed with noise reduction control features similar to the specified motor, in addition to satisfying all other equipment equivalency requirements in Section 042, and must meet the specified vibration level requirements.

Table 073-3. Maximum Propulsion Motor Above-Mount Vibration Levels

Center Frequency (Hz)	A dB re: 10^{-3} cm/sec^2
10	67.8
12.5	65.9
16	64.1
20	62.5
25	61.1
31.5	60.1
40	59.5
50	59.3
63	59.6
80	60.4
100	61.3
125	62.5
160	64.1
200	65.6
250	67.2
315	69.0
400	71.6
500	74.0
630	76.4
800	78.6
1000	80.8
1250	80.9
1600	81.4
2000	82.4
2500	83.1
3150	84.0
4000	84.9

Center Frequency (Hz)	A dB re: 10^{-3} cm/sec^2
5000	86.1
6300	88.1
8000	90.8
10000	93.0

073l. HVAC System Noise Control

The HVAC system, including fan coil assemblies and fan coil units, may not exceed the airborne noise levels in Table 073-1. The following documents are recommended to the Contractor for guidance in the design of the HVAC systems:

a. Naval Applied Science Laboratory Report, Project 5662-2, for predicting HVAC system noise

b. BBN Systems and Technologies, BBN Report 7970, "Practical Guide for Noise Analysis and Noise Control for Shipboard HVAC Systems", prepared by Pettit, L.M. and Burkewitz, B.L., December 1994

c. SNAME Technical and Research Bulletin 3-37, "Design Guide for Shipboard Airborne Noise Control"

d. ASHRAE, "Applications Handbook, 1999 edition, Chapter 42, "Sound and Vibration Control”

Additional airborne noise control measures, including airborne noise performance requirements for individual units of machinery and equipment, must be established, based on the Noise Control Program airborne noise analysis. It may be necessary to test fan coil assemblies, fan coil units and fans for compliance with airborne noise requirements.

All fan coil assemblies, fan coil units and fans must be isolation mounted on low frequency resilient mounts. Flanking noise paths must be controlled by providing flexibility in all connections such as electrical power supply cabling and ventilation ducting into and out of the fan. Duct connections on fan suction and discharge should allow free travel of the fan to the maximum extent allowed by the resilient mounts. Flanged rubber spools of maximum 40 Shore A durometer, 5 mm thick and at least 50 mm long, are recommended.

Design guidance is also provided in the above references for designing the fan room walls with sufficient noise transmission loss to prevent noise in the fan room from adversely effecting adjacent spaces or underwater radiated noise. Regenerated noise, which is a function of duct air velocity, is also a concern and a limit of 10 m/sec is desired for ducting that services or passes through noise sensitive spaces. The desired terminal velocity limit is 2.0 m/sec in noise critical spaces.

073m. Bow Thruster

Bow thruster selection, detail design and installation must be such that all habitability requirements for each shipboard space are met with the bow thruster operating in all operating conditions.

Inflow conditions through the sea chest to the bow thruster must be uniform, with velocities as low as possible.

In addition, mechanical noise sources must be addressed, including rotational frequencies related to the motor, pump and gearing. Also, airborne noise contributions at frequencies due to misalignment, gear tooth mesh, motor bearing, other motor tonals must be considered. Structural resonances may not coincide with any of the primary excitation frequencies of the bow thruster.

073n. Noise Critical Machinery Performance Requirements

The noise performance requirements must be achieved through the procurement of quiet machinery and use of silencing treatments. Sea connected systems present a significant risk to achieving the radiated noise requirements, and must be designed to minimize noise generation and transmission.

The systems, machinery and equipment listed in Table 073-4 are considered by the Government to be noise-critical and will require vendor-responsible Factory Acceptance Testing (FAT) of noise and vibration characteristics prior to shipment to the Contractor, and careful attention by the Contractor in order to meet the ship underwater radiated and airborne noise requirements. The Contractor must provide a Factory Acceptance Test Notification/Schedule, Factory Acceptance Test Procedures and Factory Acceptance Noise Test Reports. Alternatives to FAT that demonstrate compliance with structureborne and airborne noise requirements are allowable for those equipments and systems so annotated in Table 073-4.

Table 073-4 also provides a summary of anticipated contractor noise controls for each noise critical source. As part of the Contractor's Noise Control Plan, the noise control engineering firm must determine which, if any, additional systems, machinery, and equipment are noise critical and what silencing treatments are required to meet both the underwater radiated noise requirement and the airborne noise requirements contained herein. Any deviation from the noise control measures in Table 073-4 must be explicitly addressed in the Contractor's Noise Control Plan, with the associated technical rationale clearly identified.

Airborne noise tests must be conducted in conjunction with factory structureborne noise tests. Testing must be conducted in accordance with the procedures of AMCA 300-96 for fans and fan coil assemblies, and must be conducted in accordance with the procedures of MIL-STD-740-1 for all other equipment and machinery.

5 THIS PAGE LEFT BLANK

Table 073-4. Machinery Noise Control Measures

NOISE CRITICAL SYSTEMS AND ASSOCIATED NOISE CONTROL		Resilient Mounts	Special Sub-base	High Impedance Foundation	Foundation Damping	Flexible Connections	Resilient Pipe Hangers	Low Noise Motors	Alternative to FAT Allowable
PROPULSION	PROPULSION MOTOR		YES		YES			YES	
	MOTOR COOLING PUMP			YES		YES			
	MOTOR COOLING FAN	YES							
	MOTOR LUBE OIL PUMP			YES	YES				
	DC FILTER	YES							
	PROPULSION TRANSFORMER	YES							
	PROPULSION THYRISTOR	YES							
ELECTRICAL	DIESEL GENERATORS	Compound	YES	YES	YES	YES	YES		
	DIESEL EXHAUST PIPING					YES	YES		YES
	DIESEL EXHAUST MUFFLERS	YES				YES			YES
	TRANSFORMERS	YES				YES			
	[ECP 0014]~~SOLID STATE FREQUENCY CONVERTERS~~	YES				YES			
	UNINTERRUPTIBLE POWER SUPPLIES[ECP 0014]					YES			YES
	POWER SUPPLY COOLING								
AUXILIARY	FUEL OIL PURIFIER	YES				YES			YES
	SEA WATER COOLING PUMPS	YES				YES	YES		
HVAC	A/C SUPPLY FANS	YES				YES	YES		
	A/C REFRIGERATION PLANTS	Compound		YES	YES	YES	YES		
	A/C CHILL WATER PUMPS	YES				YES	YES		
	VENTILATION FANS	YES				YES			
	FAN COIL ASSEMBLIES	YES				YES			
	FAN COIL UNITS	YES				YES			YES

NOISE CRITICAL SYSTEMS AND ASSOCIATED NOISE CONTROL		Resilient Mounts	Special Sub-base	High Impedance Foundation	Foundation Damping	Flexible Connections	Resilient Pipe Hangers	Low Noise Motors	Alternative to FAT Allowable
DOMESTIC FRESH WATER	FRESH WATER PUMPS	YES				YES			
	HOT WATER CIRC PUMPS	YES				YES			YES
SANITARY	SEWAGE TREATMENT PLANT	YES				YES	YES		
	VCHT SYSTEM PUMPS	YES				YES	YES		
	MACERATOR	YES				YES			
REFRIGERATION	SHIP SERVICE REFRIGERATION PLANTS	Compound		YES	YES	YES	YES		
COMPRESSED AIR	AIR COMPRESSORS	Compound		YES	YES	YES			
STEERING GEAR	HYDRAULIC PLANT	YES		YES	YES	YES	YES		
BOW THRUSTER				YES	YES				Airborne Noise Testing Only [PA14]
TRAWLING SYSTEM	HYDRAULIC POWER PLANT	YES		YES	YES	YES	YES	YES	YES

073o. Noise Control Program

The Contractor must establish a noise control program that includes the technical and managerial approaches to be implemented to ensure noise performance and noise control requirements specified herein are achieved. A Noise Control Program Plan must be developed by the Contractor and submitted to and approved by the Government for completeness prior to implementation and prior to purchase order issuance for noise critical equipment.

073p. Technical Documentation

Noise Control Program Plan. - The noise control program plan must be prepared, and must describe as a minimum the following:

a. A description of the technical, management and organizational structure, including personnel names and positions, and procedures the Contractor will utilize to incorporate the noise requirements contained herein into the detail design and construction and to otherwise implement the noise control program.

b. Personnel performing the noise control analysis and engineering. Their technical qualifications, ship silencing experience and availability must be given.

c. Analytical and engineering methods employed for noise control. This element of the noise control program plan must also identify the major documentation to be submitted by the Contractor throughout the program to substantiate the noise and vibration control designs, and the selection of noise control treatments and materials. As a minimum, the following documentation must be submitted during implementation:

1. [PA15]resilient mounting system analysis and design report including selection and use of resilient pipe hangers and flexible pipe connections.
2. design report of the intermediate mass or masses (raft) of any compound mounting systems.
3. [NECP 001]design report of the foundations for all propulsion and auxiliary machinery, whether resiliently mounted or not, that will be operating during underwater radiated noise trials. [NECP 001]
4. Airborne [PA16]noise analysis and design report.
5. fluid systems noise control report including flow velocities, pressure drops, orifices, pressure reducing valves and rationale for establishing procurement noise criteria.
6. Rotating machinery balancing procurement criteria.

d. Planned noise control testing methodologies, including a description of all expected factory and/or pre-installation tests, post-installation tests, surveys and trials.

e. A training program plan must be prepared, documenting noise control training, informal and formal, for the indoctrination of all personnel performing functions that affect the noise control program.

f. A schedule and procedures for noise control deliverables, design reviews and tests to ensure that noise requirements of this specification are properly incorporated into the detail design. The participants in each design review must be identified.

Propulsion Motor Mounting System Design Report. - A Propulsion Motor Mounting System Design Report must be prepared. Data, assumptions and conclusions must be fully documented. Rationale for the use of DIM or resilient mounts, if any, must be presented, along with the details of the mount design. The need for a flexible propulsion shaft coupling, if any, must be presented, along with the design details of the coupling. If the Contractor's analysis indicates the need for other than a hard-mounted motor, a comparison of anticipated underwater radiated noise performance must be presented, showing expected improvements of the proposed design over a hard-mounted propulsion motor without a flexible shaft coupling.

Noise Control Corrective Action Report. - Noise Control Corrective Action Reports must be prepared. All pertinent comments on design documentation, drawings, tests and equipment installations must be listed, along with the corresponding action taken by the Contractor to correct each identified deficiency.

Factory Acceptance Noise Test Report. - Factory Acceptance Noise Test Reports must be prepared for each equipment undergoing factory noise acceptance testing. Test data must be presented and compared to the equipment noise control requirements and structureborne noise predictions.

Airborne Noise Analysis Report. - An Airborne Noise Analysis Report must be prepared. Data and assumptions utilized in development of the report and noise control treatments incorporated into the design must be fully documented. SNAME Technical and Research Bulletin No. 3-37 must be used in performing the machinery portion as well as the heating, ventilation, and air conditioning (HVAC) system portion of the analysis. For the HVAC portion of the noise analysis, the Contractor may also utilize information presented in ASHRAE, Applications Handbook, 1999 edition, Chapter 42, "Sound and Vibration Control", plus other ASHRAE publications, provided the Contractor fully documents publications from which data are extracted.

Noise sources, including machinery structureborne as well as airborne noise contributions to compartment noise levels must be identified and documented in the airborne noise analysis report. Each ship operating condition specified herein must be separately addressed. The Contractor's airborne noise analysis report must also include noise estimates for a minimum of four spaces for each HVAC fan or air handling unit, two or more for the inlet and two or more for the discharge side, as applicable. HVAC noise contributions documented in the airborne noise analysis report must include "breakout" noise as well as noise emitted from duct openings and diffusers. Both fan and flow regenerated noise contributions must be included in the HVAC system portion of the noise analysis.

The airborne noise analysis report must be updated based on the results of the Airborne Noise Survey.

Hull Vibration Analysis Report. - A Hull Vibration Analysis Report must be prepared. Data, assumptions, conclusions and changes incorporated into the design must be fully documented. The Hull Vibration Analysis Report must assess low frequency vibration of the hull girder, mast, the superstructure, the stern gantry and other above deck structures, the stern section in way of the propeller opening, and the propulsion system. Vibration produced by the propulsor and the propulsion machinery must be included in the analysis, and the analysis frequency range must encompass the primary excitation frequencies of these sources, including propulsor blade rate and machinery forcing frequencies. The analysis must incorporate a model of the ship hull structure and propulsion system mass/stiffness distribution that must include the effects of the interaction between the ship structure and the surrounding water. The results of the analysis must identify the natural frequencies and mode shapes of the ship structure and the propulsion system. The results must also include forced response amplitudes of the ship structure

resulting from propulsor and propulsion machinery excitations. The results of the forced response analysis must be compared to the ship vibration requirements, and any design modifications necessary to meet the criteria must be included. The ship structure and propulsion system natural frequencies and mode shapes provided by the analysis must be used to identify necessary design modifications.

Shaft Vibration Analysis Report. – A propulsion shaft vibration analysis report must be prepared. The shaft vibration analyses must include the following:

a. Whirling Critical Speed Analysis to ensure that the shaft-propeller mass system is free of unbalance masses. The acceptable critical speed may not be below 115 percent of the design full power shaft r/min.

b. Lateral Critical Frequency Analysis to ensure that propulsion shafting system must be free from any lateral shaft rate excitations below 115 percent of the design full power shaft r/min. The calculated critical lateral frequency must be compared with propeller excited frequency at blade rate to ensure that there will be no shaft lateral vibratory excitations.

c. Longitudinal Vibration Analysis to ensure that the design of the shafting system and the selection of the thrust bearing stiffness must be such that the computed longitudinal critical speeds are above 115 percent of the design full power r/min.

d. Torsional Vibration Analysis to ensure that the propulsion shafting system is free of torsional criticals.

Resilient Mount and Foundation Vibration Design and Analysis Report. - A Resilient Mount and Foundation Vibration Design and Analysis Report must be prepared. Data, assumptions, conclusions and changes incorporated into the design must be fully documented. The Resilient Mount and Foundation Vibration Design and Analysis Report must include a mounting system vibration design and analysis for any equipment item to be installed on resilient mounts. The design must consist of a dimensioned engineering drawing illustrating the equipment item, list of materials, resilient mount configuration, and details of how the mounts seat on the foundation. The accompanying analysis must define machine weights, moments of inertia, mount loads and stiffnesses. The analysis must calculate the rigid body natural frequencies of the mounted system, and must include any design modifications necessary to meet the coincidence avoidance criteria (rigid body criteria). The analysis must also calculate the load on each mount based on the resilient mount configuration, and must include any design modifications necessary to meet the allowable 10 percent mount loading variation. For purposes of this analysis, foundations must be assumed to be rigid. National Bureau of Standards Handbook 128, of May 1979, must be used as a guide in performing the analysis described.

[NECP 001]The Contractor must prepare a foundation design and analysis for foundations of all resiliently mounted equipment, and foundations of all rotating or reciprocating equipment that is to be rigidly mounted and that will be operating during underwater radiated noise trials. [NECP 001] For resiliently mounted equipment, the analysis must calculate the elastic natural frequencies of each foundation, and must include any design modifications necessary to ensure that the elastic natural frequencies of each foundation equal or exceed the minimum allowable values. For rotating or reciprocating equipment which is to be rigidly mounted, the analysis must calculate the three translational natural frequencies of the mass-elastic system which consists of the foundation and supported equipment, and must include any design modifications necessary to ensure that the translational natural frequencies exceed the required limit and meet the propeller blade rate coincidence avoidance requirements.

Sonar Self-Noise Analysis Report. - A Sonar Self-Noise Analysis Report must be prepared. Data, assumptions, conclusions, and changes incorporated into the design must be fully documented. The Sonar Self-Noise Analysis must assess the performance of the scientific sounder and the multibeam imaging sonar. The analysis must use operating parameters of the sonars to calculate the sounding depth capability as a function of sonar self-noise level. The significant shipboard noise sources must be identified, and noise source levels quantified for each. Paths by which noise propagates from each source to the sonar must be identified where possible, and the transmission loss along each path must be calculated. The resultant predicted noise levels at the sonar must be combined to form the local noise level. Sonar design parameters must be used to calculate array gains, which must be applied to the local noise to estimate the sonar self-noise level of the sonars as installed in the ship. These results must be used to predict the sounding depth capability of the scientific sounder and the multibeam imaging sonar as installed in the ship. The sounding depth capability must be compared to the sounder/sonar depth performance requirements. The analysis must include any design modifications necessary to meet the depth performance requirements.

List of Acoustic Isolation Systems. - A spreadsheet of all acoustic controls for piping and ventilation connections and equipment mounts must be prepared. Fields in the spreadsheet must include, as a minimum:

a. System/Equipment nomenclature
b. Device location
c. Manufacturer
d. Manufacturer's telephone number
e. Model number
f. Size
g. End fittings
h. Type
i. Assembly date
j. Shelf life
k. Load date.

075 THREADED FASTENERS

Where practicable, threaded fasteners must be metric in accordance with ISO or corresponding national standards. For cases where this is not practicable, threaded fasteners in accordance with applicable ANSI standards may be used, with the approval of the ConRep.

Fasteners for metal parts must be of a material compatible with the part. Fasteners in aluminum must be CRES. Use of brass fasteners is prohibited except for the deck fittings and tiedowns required in Section 100.

[NECP 001]Fasteners exposed to the weather or salt water must be CRES, where allowed by the specific application. [NECP 001]

078 MATERIALS

Where CRES is used, it must be ASTM A276, A473, A167 Classes 304 or 316, passivated.

Cast iron may not be used in any service where it is exposed to impact loading. [PA17]

Dissimilar metals that are not electrolytically compatible may not be joined directly. Electrolytic corrosion must be prevented by insulating dissimilar metals from each other with gaskets, washers, and sleeves, or bushings of insulating materials. Use of explosion bonded bimetallic joint material (Deta-clad) is required for aluminum-to-steel structural joints. Faying surfaces between wood, metals and laminates, or any combination of these materials, except machinery foundation shims, must be protected by use of bedding compound plus one coat of primer applied to the metal. Faying surfaces between wood and other materials must be protected by use of wood preservative fortified bedding compound.

The use of polychlorinated biphenyl (PCB) is prohibited.

Ozone depleting refrigerants and agents may not be used. The use of CFC-12 and CFC-502 is prohibited. HFC-134a and HP-62 must be used where available. Equipment utilizing HCFC-22 may be acceptable providing no non-ozone depleting substitute refrigerants are available at the time of equipment ordering, with ConRep approval.

Asbestos, radioactive or radium bearing material, magnesium, cadmium plated parts and mercury may not be used in construction applications where a functionally equivalent substitute is available, unless approved by the ConRep.

079 STABILITY

079a. General

The ship must meet all requirements of 46 CFR Subchapter U - Oceanographic Research Vessels, including the requirements of 46 CFR 190.03. In addition, the ship must meet the following:

a. 46 CFR 173.020(c) - Subpart B, Lifting (alternative compliance method)
b. 46 CFR 28.555 - Freeing ports
c. 46 CFR 170.173 - Criterion for vessels of unusual proportion and form
d. 46 CFR 173.095 - Towline pull criteria.

All criteria except those for towline pull and lifting must be met with ice loading. The ice loading must be that required in 46 CFR 28.550 for vessels operating North of the 66-30 North Latitude.

079b. Loading Conditions

Stability calculations must be performed using data from the initial weight estimate, with updates as necessary to accommodate changes to the weight estimate over time. As a minimum, the stability calculations must address the following loading conditions with the centerboard retracted:

a. Full load departure condition with full fuel, fresh water, and stores
b. Mid-voyage condition with 50% fuel, 50% fresh water, and 50% stores
c. Arrival condition with 10% fuel, 10% fresh water, and 10% consumables

Each loading condition must include:

a. A service life light ship weight margin of 3% of the light ship displacement.
b. A service life light ship KG margin of 150 mm.
c. An itinerant load with a weight of 50 metric tons at a vertical center located 2000 mm above the main deck and 40.0 m aft of the forward perpendicular.

Each condition must be evaluated with and without the icing load.

Trim may not exceed 500 mm by the stern or 100 mm by the bow in any loading condition.

List in the full load condition may not exceed one-half degree.

With the exception of the forepeak tank, ballast tanks must be either pressed-up or empty. With the exception of the day tanks, there may be no more than one pair of slack fuel storage tanks in any loading condition.

079c. Equalization of Tanks

Where needed to meet the stability criteria, tanks must be fitted with an equalization system. Equalization systems must be automatic except where impracticable. Equalization systems must comply with the requirements of 46 CFR 171.080.

A roll stabilization tank must be provided as shown on the Guidance Documents, and equipped with a means to rapidly dump the water in the tank in order to reduce the free surface in case of an emergency.

079d. Technical Documentation

Subdivision Analysis. - A subdivision analysis must be prepared to show compliance with 46 CFR 171.070. The analysis must be submitted to USCG and to the Government.

Intact Stability Analysis. - An intact stability analysis must be prepared to show compliance with 46 CFR 170.170 and 170.173. The analysis must be submitted to USCG and to the Government.

Damage Stability Analysis. - A damage stability analysis must be prepared to show compliance with 46 CFR 171.080. The analysis must be submitted to USCG and to the Government.

Trim and Stability Computer Program. - A Trim and Stability Computer program specific to this ship must be provided on 90 mm (3.5 inch) diskette or CD-ROM, to permit determining and evaluating trim and stability with known loads at observed draft mark readings. The program must include centers in three planes and must be accurate throughout the range of expected trim. The program must include the ability to determine the effects of localized superstructure icing as well as miscellaneous deck loads, permit the entry of soundings and capacities, present a graphical representation of loading, and provide loading printouts. A user interface equivalent to the

computer program "GSSP", by Glosten Associates, must be provided. The program must be consistent in all respects to the ABS approved final Trim and Stability Booklet.

Trim and Stability Booklet. - The Contractor must prepare a Trim and Stability Booklet using data from the inclining experiment. The submittal must be similar in format to a sample Trim and Stability booklet to be provided by the ConRep, and must include the following:

a. A list of revision numbers, revision dates, and general supporting data that must be maintained on the cover sheet.
b. Loading conditions for mission configurations identified in Section 070 must be calculated using the inclining data to include at least the following:

    1. Departure.
    2. Arrival, ballasted, if necessary, to maintain required metacentric height (GM).
    3. An intermediate condition if ballasting is necessary to maintain required GM.
    4. Additional conditions describing unusual loading conditions, if any.

c. Operating instructions.
d. Tank capacity data.
e. The curve of required GM.

If in the course of performing these calculations, it becomes apparent that the addition or redistribution of fixed ballast will be necessary to maintain adequate stability, the fact must be noted as part of the initial submittal.

Final corrections must be made such that all work accomplished after the inclining experiment is reflected in the calculations. The appearance of the booklet must be consistent throughout.

080 LOGISTIC SUPPORT REQUIREMENTS

080a. General

The Contractor must provide a fully supported ship at delivery, in accordance with a Logistics Support Plan developed by the Contractor.

080b. Technical Documentation

Logistics Support Plan (LSP). - A LSP must be prepared documenting the Contractor's plan for gathering and analyzing data and for management, control, execution, and integration of maintenance planning, supply support, outfitting, technical manual development, training material and course development, configuration control, and drawings.

The LSP must describe methods to ensure timely integration of logistics support, engineering, design, and management efforts. In addition, the LSP must address the master milestones planned and scheduled for the logistics effort and must include a Logistics Milestone Chart showing events required to be accomplished to fulfill all logistics tasks keyed to construction program milestones.

081 MAINTENANCE AND ACCESS

081a. Access

Equipment and machinery items must be installed to facilitate access for operation, maintenance, adjustment, removal or repair. Permanent fittings must be kept clear of equipment removal routes. Access must be considered in providing proper preservation in way of such equipment and in selecting the location of pipes, ducts, wireways and other permanent fittings behind such equipment.

Machinery lifting gear capable of handling manufacturer's specified loads must be provided for those components requiring lifting. As a minimum, lifting gear must be provided for the following: propulsion motors, steering system, propeller, propeller shaft, shaft bearings, diesels, generators, motors, bow thruster, hot water heaters, fire/bilge/ballast pumps, centerboard, trawl winches, oceanographic and hydrographic winches, heat exchangers, compressors and ventilation units. Lifting gear must be readily fitted in place. Removal clearance must be provided, and major equipment must be capable of being moved to a place for removal from the ship. The Contractor must develop and document equipment removal routes for this equipment and prove their effectiveness.

Lifting capability and access must be provided and documented for maintenance, removal and replacement of all resilient mounts.

081b. Maintenance Planning

The maintenance philosophy is planned maintenance with predictive maintenance for those equipment/systems suited for condition monitoring. Planned maintenance consists of maintenance routines performed on a predetermined schedule based upon manufacturer's recommendations. Predictive maintenance consists of maintenance routines performed based upon monitoring equipment condition over a period of time. Equipment condition monitoring is achieved by sampling and recording critical equipment characteristics such as lubrication, vibration, temperatures or performance and comparing those characteristics to previously recorded data.

Planned maintenance must be based upon the manufacturer's recommended maintenance procedures and schedules and must be identified in the applicable technical manuals.

Lube Oil Sampling Points. - As part of predictive maintenance, the Government will develop a lube oil analysis plan. To support this plan, the Contractor must install lube oil sample drain cocks on the following equipment:

a. Diesel engines.
b. Air compressors.
c. Refrigeration and air conditioning compressors (if fitted with oil sumps).
d. Line shaft bearings.
e. Inboard boat engines.
f. Oil lubricated motors.

Hydraulic Oil Sampling Points. - As part of predictive maintenance, the Government will develop a hydraulic oil analysis plan. The Contractor must install hydraulic sampling fittings in each hydraulic system installed in the ship, including steering gear, trawl winch hydraulic system, oceanographic winch hydraulic system, and crane and A-frame hydraulic power units.

Vibration Monitoring Sensor Pad Locations. - As part of predictive maintenance, the Government will develop a vibration monitoring plan, provide vibration monitoring equipment and install vibration monitoring sensor pads after ship delivery. To support vibration monitoring, the Contractor must prepare a list of manufacturer-recommended sensor pad locations for any rotating equipment that is suitable for vibration monitoring. As a minimum, the following equipment must be considered as candidates for vibration monitoring:

a. Diesel engine turbochargers.
b. Diesel generator engines and generators.
c. Fuel pumps and motors.
d. Motor driven seawater pumps.
e. Jacket water cooling pumps.
f. Engine mounted pumps.
g. Steering gear units.
h. Lube oil service pumps and motors.
i. Hydraulic pumps and motors.
j. Machinery space ventilation fans.
k. A/C plant and chilled water pumps and motors.
l. Sewage system pumps and motors.
m. Potable water pumps and motors.
n. Refrigeration plants.
o. Air compressors.
p. Propulsion motor(s).
q. Lineshaft bearings.
r. Bow thruster motor.
s. Purifiers.
t. Hydraulic Power Units for winches (trawl, oceanographic, hydrographic, and net sonde).

081c. Technical Documentation

Component Removal Routes. - Individual component diagrams with accompanying written instructions must be prepared to demonstrate and explain the process for removal of major components from their installed location to the engineer's workshop, and for removal from the ship. The specific routes and required preparation (by disassembly of other systems and components) must be included, as well as any cutting of steel hull or support members. A list of

equipment required to maneuver components must be provided in the written instructions for each component. Component diagrams and written instructions must be provided for the following: propulsion motors, steering system, propeller, propeller shaft, shaft bearings, diesels, generators, motors, bow thruster, hot water heaters, fire/bilge/ballast pumps, centerboard, trawl winches, oceanographic and hydrographic winches, heat exchangers, compressors, ventilation units and integrated bridge system consoles.

Maintenance Plan. - A maintenance plan must be prepared and must include sections for planned maintenance and predictive maintenance. In addition to regulatory requirements, the maintenance plan must address the following areas:

a. List of equipment/systems covered.
b. Schedules for maintenance actions as described in the technical manual.
c. Procedures to be performed as described in the technical manual.
d. Materials and tools required to perform maintenance as specified in the technical manual.
e. List of lube oil sampling point locations.
f. List of vibration monitoring sensor pad locations.

The maintenance plan must meet ABS requirements for implementation of AMS continuous surveys.

083 SUPPLY SUPPORT

083a. Required Spares and Repair Parts

The contractor must procure and load onboard at ship delivery, the spare parts identified in Appendix 4/A of the ABS Rules for Building and Classing Steel Vessels. These spares are included within the scope of the basic ship construction.

There are spare and repair parts (shore-based and onboard) required by the Government and included within the scope of the basic ship construction. The contractor must procure and load onboard at ship delivery the following required spare and repair parts:

Shore-Based:	
Propeller blades	1 ship set
Propeller gauges	1 ship set
Propeller shafting and bearings	1 ship set
Hydrographic Winch Drum and Lebus shell	1 set
Onboard:	
V-Belts (labeled for service)	2 ship sets
Radar repair kit	1 for each unit
Flexible hoses (labeled for service)	1 ship set
Diesel engine fresh water and raw water cooling pump overhaul kits	1 for each type of pump installed
Diesel engine overhaul kits	1 for each type engine

Filter elements - lube oil, fuel systems and fresh water systems (labeled for service)	6 ship sets
Fuel injectors	2 engine sets for each type engine
Electric lamps (labeled for service)	1 ship set
Fuses (labeled for service)	5 ship sets
Windshield wiper blades	1 ship set
Strainer baskets	1 each size
Fire pump overhaul kit	1 each type
Bilge pump overhaul kit	1 each type
Hydrographic winch repair kit	1 each
Oceanographic winch repair kit	1 each
Heavy lift crane repair kit	1 each
Hydraulic motor repair kit	1 each type
Hydraulic pump repair kit	1 each type

The term "**ship set**" means one replacement item for each unit of the parent equipment installed on the ship.

Shore-based spares must be placed onboard for transfer with the ship during delivery. In the event the shore-based spares are unavailable at ship delivery, the contractor must ship to the location requested by the Government.

083b. Additional Spare and Repair Parts

In addition to the Required Spare and Repair Parts, the Contractor must prepare a list of additional spare and repair parts, unique tools, support and test equipment necessary to support each equipment, component or system installed onboard based on vendor recommendations to support one year of operations (6,500 hours). The contractor must prepare one list for each major equipment, to include the parts list from the technical manual with each item separately priced and vendor recommended quantities identified. The lists must be provided to the Government for selection and procurement authorization. Upon Government authorization, the contractor must procure and load the additional spare and repair parts onboard at ship delivery.

083c. Outfitting

The Contractor must receive, inspect, identify, label and store spare and repair parts, consumables, tools, test equipment, publications, technical manuals, damage control and other ship support items, as ordered by the Government and as listed in the Initial Outfitting List. The Contractor must prepare Outfitting Summary Statistics to show the status of all ordered spare and repair parts.

Outfitting Operations Plan. - The Contractor must prepare an Outfitting Operations Plan for approval by the Government. The plan must describe the procedures and controls for procurement of outfit materials during the ship construction.

Storage. - Repair parts storage must be limited to storerooms, designated storage units in operating spaces, and open storage cabinets. Stowage must be provided for those items specified in the Initial Outfitting List. Bins, racks and shelves must be designed and arranged to suit the parts. Material and equipment must be stowed as required in Sections 670 and 672.

Stowage Preservation. - Stowed items must be preserved for a shipboard environment. Shafting and crankshafts, if provided, must be individually boxed and supported, with integral supports for bearing and shaft surfaces to prevent distortion when stored ashore for long periods. The shafts and crankshafts must be coated with preservative. Other shore-based spares must be packaged as recommended by the manufacturer for long-term, non-environmentally controlled warehousing.

Stowage Integrity. - Parts must be secured against coming adrift or moving within storage cabinets due to motion of the ship in a seaway.

Stowage Markings. - Stowage locations must be marked with a permanent identifying symbol from which the stowage location can be easily determined.

List of Stowage Locations. - The Contractor must prepare a listing of equipment which he is responsible for loading onboard the ship, with the applicable designated onboard stowage location indicated. This list must be included in the Outfitting Operations Plan.

Loading. - The Contractor must load and stow, in the prescribed locations onboard the ship, at the time approved by the Government, authorized CFM and GFM as described in the Outfitting Operation Plan. The Contractor must retain accountability for the material until the Government signs for, and accepts custody of, such material, utilizing procedures contained in the approved Outfitting Operations Plan. A listing of outfitting material received after ship delivery must be prepared.

Identification Marking of Spare and Repair Parts. - The Contractor must mark all spare and repair parts with the following information:

a. Part name
b. Manufacturer's CAGE and part number
c. Manufacturer's name
d. National Stock Number (NSN) (if available)
e. Serial number (if applicable)
f. Stowage location

Markings must be applied either to an identification plate fastened to the item or directly to the surface of the item. When items cannot be physically marked or tagged because of lack of marking space, or because marking or tagging would have a harmful effect, marking must be applied to the unit container. Identification marking must be legible and permanent.

Conferences. - The Contractor must attend, and provide facilities for, an Outfitting Guidance Conference, which must be held within 120 days of Contract Award.

083d. Technical Documentation

Required Spares and Repair Parts List. - A list of spare and repair parts to include ABS, shorebased and onboard must be prepared, and must include the following data:

a. Parent Equipment Name.
b. Part Name.

c. NSN (if available).
d. Manufacturer's Name and Telephone Number.
e. Manufacturer's Part Number.
f. Quantity Onboard.
g. Quantity Ashore.
h. Unit of Issue.
i. Quantity Unit Pack.
j. Cost (current year).
k. Vendor.
l. Weight.
m. 3-digit WBS.

Additional Spare and Repair Parts Equipment Lists. - Individual equipment spare and repair parts lists must be prepared and provided to the Government for selection and procurement authorization. The lists must be prepared, and must contain the following information:

a. Parent Equipment Name
b. Part Name
c. Manufacturer's Name and Telephone Number.
d. Manufacturer's part number and CAGE code.
e. NSN (if available).
f. Quantity recommended by the vendor.
g. Cost (current year).
h. Procurement lead time.

Consolidated Spare and Repair Parts Inventory List. - A consolidated spare and repair parts inventory list must be prepared, and must combine all spares and repair parts to be provided to the ship. The list must be derived from the Required Spare and Repair Parts List and the Additional Spare and Repair Parts Lists (as authorized by the Government) and primarily sorted by the Parent Equipment Name and secondarily sorted by Part Number. This data will be used as the ship's master inventory and will also be used as data input to the Shipboard Automated Maintenance Management System (SAMMS). SAMMS is a computer-based shipboard planned maintenance system designed specifically to track, schedule, and maintain records of maintenance accomplished aboard ship. This system will be loaded onboard ship by the Government after ship delivery. The contractor must provide input data prepared in accordance with the database structure identified below. The data must be entered into the database in the exact format indicated below to allow for transfer to SAMMS database. Each row on the sheet should hold all the information for a given part. The 13 column headers to be used on the spreadsheet are as follows:

a. **Equipment Name.** This is the parent equipment for the given part. Typically, all parts for a given equipment will be grouped together (e.g. NO.1 MAIN ENGINE)

b. **Part Name.** The text description of the part (e.g. GAUGE, 0-160 PSI)

c. **National Stock Number.** The Government assigned part number used for federal purchases (e.g. 6685-01-073-7588). This number should be provided if available.

d. **Manufacturer.** The manufacturer for the part (e.g. DETROIT DIESEL)

e. **Manufacturer's Part Number.** The part number assigned by the original equipment manufacturer used for purchases directly from the manufacturer. Vendor part numbers are not acceptable.

f. **Quantity Onboard.** The quantity stored aboard the vessel.

g. **Unit of Issue.** The two-character designator for the unit of issue (e.g. EA for each, BX for Box).

h. **Quantity Unit Pack.** The minimum number that can be purchased. Typically, the number per box (e.g. 1 for gears or 20 for light bulbs).

i. **Cost.** The current year price per Quantity Unit Pack (e.g. $10 for the 20 light bulbs).

j. **Vendor.** Where to purchase the part (e.g. Seattle Pump and Equipment).

k. **Compartment.** The room where the part is stored on the vessel (e.g. C-08).

l. **Location.** The shelf or drawer in the compartment where the part is stored (e.g. Drawer 3). Count drawers or shelves from the entry back and from the top to the bottom. For instance, the top drawer in the chest of drawers closest to the entrance would be Drawer 1. The drawer directly under it would be Drawer 2 and so on. If the first chest of drawers had 6 drawers, the top drawer in the next chest of drawers would be Drawer 7.

m. **Section.** The position within the shelf or drawer where the part is stored (e.g. 2). Count from left to right then front to back.

Outfitting Operations Plan. – An Outfitting Operations Plan must be prepared, describing procedures, controls and schedule for procurement and installation of outfitting items.

085 DRAWINGS

085a. General

Construction Drawings. - Construction drawings are those drawings and associated lists necessary for the construction of the ship, and other related drawings describing the arrangements, structure, systems, and equipment provided.

Diagrams. - Diagrams show the relative location of fittings, branches and equipment in distributive systems. Diagrams must contain complete information such as pump and fan characteristics, pipe or duct sizes, materials, flows, velocities (normal and maximum), pressure drops, and other pertinent design data such as associated components, identification and operation characteristics.

Equipment Drawings. - Equipment drawings are those drawings that permit the disassembly, repair and reassembly of equipment when used in conjunction with equipment technical manuals.

Final Drawings. - Final drawings are the last revision of construction drawings and data which illustrate final ship and system arrangement, fabrication, installation, and equipment as actually installed. Final drawings must reflect the ship at delivery.

085b. Technical Documentation

General. - Drawings must be prepared for the construction of the ship.

Drawings must make reference to and be consistent with other related drawings, technical manuals, and other technical documentation.

The latest revision of each drawing must accurately reflect the current status of changes. Identification of all revisions and modifications must be incorporated on the drawings.

If defects develop in machinery, systems or equipment during the guarantee period, and if corrections of such defects are determined to be the responsibility of the Contractor, and if the correction requires an engineering change, the final drawings must be revised or new drawings must be provided to show modifications made to correct such defects.

General Arrangement drawings must be prepared. The Booklet of General Drawings must be prepared based on the final General Arrangement drawings.

HVAC drawings must include fans (with volumetric rate), dampers, controls, terminals, ducts, heaters, louvers, terminal deliveries (volumetric rate), and cooling coils. Direction of air flow must be shown as appropriate.

Electrical and electronic drawings must show wiring runs in thick lines and structure (such as outlines of decks and bulkheads) in thin lines and must show the spaces through which each wire run passes.

Electrical drawings and diagrams must contain material lists. Applicable cableway installation drawings must be included in the list of references. Each drawing with symbols must have a legend showing each symbol used and its name or descriptive identification. For power and lighting drawings, symbol numbers only may be used instead of the graphic symbols. Cable ends to be sealed must be indicated on system cable diagrams.

Equipment drawings must be provided with the equipment technical manual, and be of sufficient detail to permit the disassembly, repair and reassembly of equipment when used in conjunction with equipment technical manuals. Equipment drawings must be in the same units of measurement as those used for the fabrication of the equipment. Equipment drawings must be identified by manufacturer's drawing number.

Construction Drawings. - Construction drawings must be prepared, and must include arrangements, lines and offsets, electrical and electronics drawings, diagrams and supporting calculations.

Construction drawings must fully describe the construction of the ship. Supporting calculations and diagrams must incorporate the following data as applicable:

a. Working load, test load, assumptions as to manner of loading (live, dead, alternating), assumed friction, materials, maximum stresses in each part (compressive, tensile, shear, bearing, and torsional) developed by the working load, and the factor of safety in each part.

b. Information regarding characteristics under dynamic loadings, where applicable. This must include calculations for natural frequencies of vibration and for resistance to loading, together with pertinent data.

Drawings that require Regulatory Body approval must be submitted after approval by the Regulatory Bodies. Calculations to support the drawings must be included where applicable. Drawings that require Noise Control Engineering Firm review must be submitted after certification by the Noise Control Engineering Firm. Analysis to support drawings must be included where applicable.

Drawings and associated lists must provide the design information necessary to enable a manufacturer of similar products to produce and maintain quality control of item(s) so that the resulting physical and performance characteristics duplicate those of the original design. The drawings must reflect the end product and provide engineering data for logistic support.

All parameters required to define each unit, assembly, part or material must be presented on the applicable drawing including the following to define fabrication, acceptance, interface or installation: all necessary mechanical dimensions, electrical parameters, physical parameters and environmental conditions. Drawings and associated lists must be identified with the contractor's CAGE code and contractor document numbers or with a Government CAGE code and document number.

Tank Capacity Curves, Booklet of Tank Sounding Tables and Drawings. - Calculations for all curves must be based on the assumption that the ship has zero trim and deductions must be made for all obstructions, such as structure, piping, and fixed ballast within the tank. Vertical centers of gravity must be referenced to the baseline. Longitudinal centers of gravity must be referenced forward perpendicular to the same longitudinal references as used in the curves of form. Transverse centers of gravity must be referenced to the centerline of the ship. For tanks that are completely symmetrical about the centerline of the ship, a note to this effect must be added to the drawing.

For tanks with sounding tubes installed, a true projection of the sounding tube must be plotted on the tank capacity curve drawing. The fore-and-aft location of the tube must be indicated. The scale must show sounding above the point at which the sounding instrument hits the striker plate and must be based on the sounding tube as actually installed. The scale must have sufficient divisions and distance between each 10 centimeter mark to allow legible curve readings of the increments. For tanks sounded by petcocks instead of by sounding tubes, a scale showing height of each petcock above the bottom of the tank must be substituted. Tank Capacity Curves must include the following:

a. Curve showing capacity in liters or cubic meters, as appropriate, for tank filled to any level, plotted against height above baseline.

b. Curves showing vertical, longitudinal and transverse coordinates of the center of gravity of each tank for the tank filled to any level. These curves must all be plotted against height above baseline.

c. A curve showing the transverse moment of inertia of the free surface about its own neutral axis, for the tank filled to any level. This curve must be plotted against height above baseline.

d. Notes on the curves must indicate the capacity of each tank when full (95% for fuel and lube oil tanks) and the tailpipe allowance.

e. Notes must indicate the heights of the low point and top of the tank above the baseline.

f. Tankage diagram.

The Booklet of Tank Sounding Tables must include a title page, a summary page, and pages tabulating capacities, centers of gravity, and moments of inertia for each tank.

The summary page must include a tabulation for each type of liquid, showing individual tank and total capacity.

For each tank fitted with a sounding tube, the sounding table must consist of a page listing tank capacity in liters for each 10 centimeters of sounding. The heading of each page must list the compartment number, type of liquid, and location of tank by frames. The following information must be noted on each page:

a. Sounding and capacity when the tank is full.
b. Sounding and capacity when the tank is 95 percent full (fuel and lube oil tanks only).
c. Amount of liquid remaining in each tank when the lowest point of suction has been reached.
d. The total length of each sounding tube from the upper terminal to the striker plate.
e. Height of the lowest point of the tank above the baseline.
f. Height of the striker plate above the lowest point of the tank.

Lines and Offsets. - The lines drawing must show faired lines and tabulated offsets at equally spaced stations. Lines of contours and decks must be shown. A tabulation of dimensions of the faired lines must be included as follows:

a. Half-breadth of shell plating of waterlines at every frame.
b. Heights and half-breadths on every frame of the following:

1. Bilge keels
2. Centerline of shaft
3. Decks and platforms
4. Inner and outer traces of longitudinals
5. Inner and outer traces of girders
6. Knuckles
7. Longitudinal bulkheads
8. Outer traces of stringers
9. Shell plating edges and inner bottom plating edges
10. Heights of buttocks of shell and inner bottom on every frame
11. Dimensions of bow and stern profiles, including the trawl ramp
12. Dimensions of other appendages and contours

Docking Drawing. - The docking drawing must incorporate actual dimensions taken from the ship before launching or while in drydock prior to delivery and must include the following:

a. A plan view of the ship and the blocking arrangement.
b. Profile of the hull supported on keel blocks.
c. Sections, as required, to illustrate the transverse blocking arrangement, especially in cases where high blocking is required and stability in dock is a consideration.
d. Location of keel blocks in three docking positions.
e. Location of side blocks in three docking positions.
f. Location of bitts and chocks on both profile and plan views.
g. Location of underwater appendages on both profile and plan views.
h. Location of acoustic transducers and other scientific sensors.
i. Frame spacing of ship on profile views.
j. Indication of major transverse bulkheads on the profile view.
k. Notes on the profile view in the vicinity of the rudder, propeller and shaft, and removable appendages, identifying the clearance required for their removal.
l. Notes on the profile view specifying all discharge openings by service.
m. Table of critical dimensions.
n. Table of displacements and other properties for docking.
o. Table of block bearing area and pressure.
p. List of openings in the shell with locations.
q. Table of offsets for side blocks and keel blocks as required.
r. The design waterline, forward and aft perpendiculars and all draft marks and plimsoll marks.
s. Any other information necessary in docking the ship.

Booklet of General Drawings. - The Booklet of General Drawings must be in booklet form for ready reference and must be no smaller than 1:100 scale.

Drawings must contain information concerning access, general arrangement, fittings, outfit, auxiliaries, frame numbers, and compartment numbers and names.

The booklet must include the following:

a. Cover or title page.
b. Table of Contents.
c. Compartment directory.
d. Sheet of general dimensions and data, including:

1. Length, between perpendiculars. Length, overall. Breadth, extreme.
2. Navigational draft at full load condition with service life allowance, centerboard extended and retracted.
3. List of boats, liferafts and davits.
4. Capacities of cranes, A-frame, stern gantry and other weight handling devices.
5. Full load and light ship condition displacements.
6. Type of power plant, power (kW) and trial speed.
7. Propeller characteristics.
8. Generating plant description.
9. Steering unit description.
10. Deck machinery description.
11. ABS equipment numeral.
12. Accommodations by type.
13. Gross tonnage.

e. Outboard profile. Both sides and antennas must be shown. Outboard profile drawings must show underwater body and fittings in hidden lines, and must indicate the heights of decks, platforms, masts, antennas, navigation lights and waterlines. The horizontal distance between masts must be shown.

f. Inboard profiles showing the locations of the forward and after perpendiculars and midship mark. Each of these locations must be dimensioned to the nearest frame line.

g. Decks (a drawing of each deck and platform).

h. Inner bottom.

i. Midship and typical sections, indicating scantlings and details of construction and molded heights of decks above baseline.

j. Forward view.

k. Aft view.

l. Topside plan view showing exposed weather areas and including lights, rigging, antennas, deck and mission equipment, and other fixtures.

Berths, food service and propulsion equipment and furniture must be shown only as necessary for clear understanding, using straight-line outlines and labeling. Major items of machinery must be numbered. The propeller must be shown on outboard profile and appropriate deck drawing. Arrangement of furniture and equipment in living spaces, offices and similar spaces must be shown. Berths must be marked single or double. Furniture such as chairs and similar small articles need not be shown. The location, degree of tightness and fire resistance of each watertight and fire zone boundary must be shown.

Machinery Arrangement Drawings. - Machinery arrangement drawings must show propulsion, electrical, and auxiliary machinery systems and equipment. Machinery arrangement drawings must also show other pertinent features such as major machinery foundations, removal space outlines, unshipping of shafting, combustion air intake and exhaust systems, ladder

landings and accesses, stanchions, overhead structure, bulkhead stiffeners, and other hull structure necessary to indicate machinery obstructions, large piping such as sea connections and valves, location of removal plates for shipping and unshipping machinery, permanent lifting gear location, purpose and arrangements, and locations of firefighting equipment. Major piping systems, tanks, ventilation, wireways and other distribution systems must be shown.

Damage Control Diagrams. - The following damage control diagrams must be prepared:

a. Flooding Effects Diagram.
b. Liquid Loading Diagram.
c. Subdivision Diagrams.
d. Bilge, Ballast and Seawater Systems Diagram.
e. Firemain and Fixed Firefighting Systems Diagram.
f. Fuel Filling, Transfer and Overflow Systems Diagram.
g. Ventilation Systems Diagram.

Diagrams must show overall system configuration as installed in the ship, control and monitoring device locations and similar features necessary for monitoring and directing effective onboard damage control and firefighting evolutions.

Two sets of damage control diagrams, ANSI Y14.1 standard drawing size C or international paper size A2, must be prepared. Each diagram must be laminated on both sides with a rigid vinyl plastic cover and the front must be a matte surface for marking with marking crayons (grease or wax) that are easily removed with a dry cloth without the crayon colors becoming imbedded in the plastic surface. Laminated diagrams must have approximately 20 mm overlap around the edges.

Final Drawings. - Final Drawings must be prepared.

Final Drawing Index. - An index of final drawings must be prepared. The drawing index must be a tabular listing sorted in alphanumeric sequence within WBS element. The index must reflect “as built” Ship Construction Drawings. A cover sheet must accompany the index. The index must include drawing name, number, computer file name, type (construction, final), drawing size, number of sheets, revision and revision date.

086 TECHNICAL PUBLICATIONS

086a. General

The Contractor must develop and implement a Technical Manual Organization Plan (TMOP), and must develop a Technical Manual Status Report (TMSR).

The Contractor must furnish commercial technical, operation, and maintenance manuals with supplementary data such as configuration drawings and repair and maintenance parts lists for all Contractor-furnished equipment and systems. Technical manuals must be clearly marked as to equipment model, serial number(s), and ship applicability. Calibration procedures must be provided for systems and equipment with such requirements.

Technical manuals must be placed onboard the ship prior to Acceptance Trials.

The Contractor must prepare an Engineer's Operating Manual (EOM) which describes all machinery and machinery control systems.

Equipment and system technical manuals will be accepted based upon verification of operating instructions, maintenance procedures, and spare parts references contained therein. Technical manual troubleshooting procedures, maintenance procedures, equipment operating instructions, spare and repair part references, and repair procedures must be verified through practical onboard applications of the technical manual during equipment operation and testing. The Government reserves the right to conduct additional verification of technical manuals as necessary to ensure satisfactory operation, troubleshooting and maintenance of equipment and systems.

086b. Technical Documentation

Technical Manual Organization Plan. - A Technical Manual Organization Plan (TMOP) must be prepared. The plan must include the following information:

a. Listing of all technical manuals to be provided
b. Source of supply (existing vendor part or Contractor developed)
c. Delivery schedule

Technical Manuals. - Technical Manuals must be provided.

Technical Manual Status Report. - A Technical Manual Status Report (TMSR) must be prepared. The report must include the following information for each manual:

a. Technical Manual Identification Number
b. Title of Manual
c. Percentage of completion at the time of report
d. Scheduled milestone dates (In-Process Reviews, Validations etc.)
e. Drawing Status
f. Parts List Status
g. Comments if necessary

092 TESTS

092a. General

The testing provisions of this section apply to all hardware, software, documentation, training, test equipment, spares, services and other deliverables under this contract. Quality and performance of all items delivered must be demonstrated by the Contractor by a formal test program. Unless otherwise specified, the Contractor is responsible for the performance of all tests, inspections and analyses. The Government reserves the right to witness all testing.

The Contractor must establish a Ship Acceptance Program that demonstrates compliance with ship, systems and equipment performance requirements. Shipboard tests must be performed

in accordance with SNAME Technical and Research Bulletin Nos. 3-39 and 3-47. The Ship Acceptance Program must be documented in a Ship Acceptance Program Plan.

The Contractor must furnish all material, fuel, labor, power, equipment and instruments necessary to perform the tests. Instruments used in performing tests must be calibrated prior to the tests by a certified testing laboratory.

Test procedures must include the light-off, normal, emergency and diagnostic procedures identified in the equipment or system technical manual. Each test must be performed in the presence of the ConRep, except when the ConRep provides prior authorization to the Contractor to perform, report, and certify the results of the test in his absence. Technical manuals must be available during the tests.

092b. Definitions

The following definitions are provided:

Inspection. - Inspection is defined as visual verification that the system, including system documentation, conforms to the statement of requirements. Visual verification can be in the form of inspection of the physical installation or inspection of drawings showing physical relationships, or review of documents reflecting qualification requirements.

Analysis. - Analysis is defined as verification that the specification requirements have been achieved by evaluation of equations, charts, reduced data, comparison of analytical predictions with available test data, etc. Verification by analysis, however, does not include the normal analysis of data generated during testing. This verification requirement may be fulfilled by submission of data previously produced that demonstrates the analysis has been satisfactorily accomplished.

Demonstration. - Demonstration is defined as a non-instrumented test where success is determined by observation, only, such as fit and function checks and observations that require simple non-instrumentation type measurements.

Test. - Test is defined as verification of requirements through application of established test procedures, usually with instrumentation, within specified environmental conditions, and subsequent compliance confirmation through analysis of generated data. This requirement may be fulfilled by submission of data that demonstrates that the required test has been successfully accomplished. Surveys and trials are dock and sea based tests.

Certification. - US Coast Guard, ABS, SOLAS, or MARPOL certification, vendor test data and other assurances that the performance requirements are satisfied will be accepted as a substitute for inspection, analysis, demonstration or test. Regulatory bodies determine the level and type certification required.

092c. EMI Testing

The Contractor must provide an EMI Test Procedure to ensure the EMI requirements of Section 070 are satisfied. The test procedure must include a description of test site, instrumentation, equipment, modes of operation, and measurements that will be recorded. The procedure must describe all test activities and pass/fail criteria for the equipment under test. Potential radiating equipment must be energized while susceptible equipment are energized and monitored for interference. If interference is detected, the active equipment must be de-energized one at a time until the interfering source is determined. Any extraneous signals generated by or caused by the active equipment must be termed interference. The following severity levels must be assigned:

a. **Mild.** - A level of interference which, although detectable, does not hamper the detection and interpretation of a desired signal. This level of interference is mainly a background or nuisance type, with momentary (50 millisecond) disruption of equipment operation.

b. **Medium.** - A level of interference which interferes with the detection and interpretation of a desired signal. This level of interference causes partial break-up or masking of the desired signal with some loss of signal content. Equipment operates in a degraded condition.

c. **Severe.** - A level of interference which causes complete loss of a desired signal or interferes to the extent that desired signal information or message content cannot be interpreted. Equipment is inoperable.

EMI caused by CFE, or by the installation of GFE, which exceeds the mild level as defined above, must be corrected by the Contractor.

092d. Noise, Vibration and Resilient Mounting

Factory Acceptance Testing of noise critical machinery and equipment must be conducted as required by Section 073.

Surveys. - The following surveys must be performed prior to the Underwater Radiated Noise Tests:

a. A system isolation and clearance survey to ensure that resiliently mounted machinery and equipment are properly installed; noise isolation features, including resilient mounts, resilient pipe hangers, and flexible connections are properly installed and undamaged; and that there are no sound shorts and acoustic deficiencies.

b. An acoustic treatment survey to ensure that sound absorption materials including damping tiles and transmission loss treatments are in good condition and properly installed.

c. A hull survey to identify potential sources of flow tones and flow excited rattles and noises.

092e. Navigation, Communication and Mission Systems Electronics

Coaxial cables for equipment specified in Section 441 and for space and weight items must be tested by a time domain reflectometer to the operating frequency, or to the frequency range for which the cable will be used. Testing must be performed after installation of the cables to ensure that the cables have not been damaged or degraded. For all other systems requiring coaxial cable, testing by time domain reflectometer is required only in the event of degraded performance after installation.

Equipment operational tests must be performed. All acoustic systems must be operated simultaneously to the maximum extent possible at the required speeds and when performing stationkeeping and trackline tests. In addition, the Contractor must perform continuity tests on signal and power cables, and ensure services are operational.

Upon completion of all antenna installations, the Contractor must identify areas of the ship and conditions where the exposure limits of ANSI C95.1 are expected to be exceeded.

Mission systems, including scientific sonar systems, scientific instrumentation and mission handling systems, must be tested to verify correct installation and system performance in accordance with manufacturer's specifications.

The Contractor must demonstrate the mechanical and electrical intrasystem and intersystem adjustments and alignment of the steering gear, and ship's navigational system elements, including sonars, radar, gyrocompass and repeaters, DPS, and other navigation equipment and mission sonars.

Optical cable assembly loss testing must be performed after termination in accordance with method B of EIA/TIA-526-14 at a wavelength of 1300 nm. The optical loss may not be greater than 1.7 dB. Single mode fiber optical cable assemblies must be tested for return loss in accordance with method 2 of Annex A of EIA/TIA-455-107. The optical return loss of the cable assembly, including both end connectors, must be less than 30 dB.

092f. Hull Fittings

All hull fittings, including deck sockets, must be pull tested to two times the working load.

092g. Technical Documentation

Ship Acceptance Program Plan. - The Contractor must prepare a ship acceptance program plan that documents how the requirements of this SOR are to be met. Test documentation must include an identifying number for each test. The test numbering system must enable rapid location of individual tests, and must have traceability to the WBS section for which the tests will be conducted. The same number must be assigned to test documentation and test data associated with a particular test. Joint test documentation may be used for approval and witnessing of tests simultaneously by the ConRep and the Regulatory Bodies where appropriate and when acceptable to the ConRep and the Regulatory Bodies. The Ship Acceptance Program Plan must provide a complete description of the test and trials program to be implemented. The plan must contain sections for:

a. Introduction and Summary
b. Approach
c. Test and Trials Organization
d. Milestones
e. Documentation development and control
f. Test and Trials Conduct
g. Test and Trials Equipment
h. Support Requirements
i. Reporting

The use of Flow Diagrams is encouraged to show the functional description of the acceptance program by using block diagram portrayal of the functions that must be met to satisfy the total acceptance program.

Test Schedule. - A Test Schedule must be prepared and include a complete listing of each test to be performed, and must provide dates for the conduct of each test. The Contractor must notify the Government of all planned test events. The schedule shall include the time and

meeting location for each test. If a test has been scheduled and is subsequently canceled or deferred for any reason, the ConRep must be notified as soon as possible, but in no case less than one hour prior to the scheduled start of the test.

The Test Schedule must include; test commencement and completion dates, ordering of prerequisite test and event items, and test program problem areas.

The Test Schedule must be comprised of three basic subdivisions:

a. The title/cover page

b. A Test Schedule Listing, which must be a tabular listing by test number and as a minimum must include the following columns:

   1. Test number
   2. Test title
   3. Test procedure revision letter
   4. Scheduled test start date
   5. Schedule test completion date
   6. Actual test start date
   7. Actual test completion date

c. A Test Bar Chart Schedule in Gantt style with horizontal bars showing duration of test conduct and other test related activities.

Test Procedures. - Test procedures must be prepared for each test. Test procedures must contain adequate safety precautions and procedures to ensure personnel and material are not subjected to undue hazards.

Test procedures must provide the detailed description of the operations to be performed and the parameters to be met during the conduct of each test. Each test procedure must contain data sheets suitable for recording the quantitative values determined during the conduct of the tests. Each data sheet must show specified values and tolerance limits for each measured value, a Test Conductor signature, a ConRep witness signature and test date. Block diagrams, simplified schematics or diagrammatics may be used to clarify the procedure or simplify the test method. Comment sheets must be included to record significant events and observations that occur during conduct of the test. The test procedure may be modified at the time of the test, if approved by the ConRep.

Test Reports. - The Contractor must prepare a test report for each test conducted. The test reports must consist of the test procedure with completed data recording sheets.

Test data must include any marked-up pages of the test procedure, all completed data sheets, comment sheets, and all supporting data such as computer printouts, strip charts, oscilloscope recordings, electronic media, and photographs. Calibration results must be provided for systems and equipment with such requirements. Test data that is not an integral part of the test procedures must be annotated with the test number, hull number, date and any other pertinent information.

The signing of any data sheet by the ConRep signifies only that the test was conducted in accordance with the approved test procedure and that test data was accurately recorded.

The Contractor must retain the master copy of each test procedure by which a test was conducted and on which the test results were recorded. The Contractor must retain the originals of test data. These records must be turned over to the Government at ship delivery.

094 TRIALS

094a. General

Trials must be performed in accordance with SNAME Technical and Research Bulletin No. 3-47, and the requirements specified herein. Trials must include all First of Class and All Ship items, as well as bow thruster, low speed controllability and other auxiliary systems tests. Torsionmeters must be used.

The Contractor must establish an organization for the administration, supervision, and performance of trials, including service and dockside personnel, and other services as necessary to dock and undock the ship. A competent trial crew must be provided by the Contractor, and must include an appropriately licensed master and licensed chief engineer. Operation of the ship and its machinery, equipment, and systems must be in a safe manner and in accordance with operating instructions. The trial crew must record data and compute trial performance and results. Trial data must be readily available to Government observers, and trial results must be posted in the vicinity of the data collection and computation center. A complete trial report must be prepared by the Contractor for each set of trials.

The Contractor must furnish subsistence for Government representatives and observers while the ship is at sea. When the ship is out overnight, berthing accommodations must be provided. Where transportation between ship and shore is required, and where transportation between points of debarkation and the shipyard is required, the Contractor must furnish such transportation.

Instrumentation and equipment required for trials must be furnished and operated by the Contractor. The Contractor must provide, calibrate and install temporary instrumentation to obtain the required data. The Contractor must calibrate all permanently installed instruments prior to trials. The Contractor must furnish all fittings necessary and modify all systems as required to install all trial instrumentation. After satisfactory completion of the trials, the trial instrumentation must be removed and all systems restored to their normal operating condition.

Satisfactory operation of the machinery plant components and controls must be demonstrated dockside and during underway trials. The propulsor must be operated under partial load at the dock before sea trials, in accordance with SNAME Technical and Research Bulletin No. 3-39.

The underway trials must be performed with the ship in the full load condition. The longitudinal center of gravity must be determined by comparison of the draft marks and the Curves of Form.

During propulsion and endurance trials, the ship must be operated in water depths of not less than ten times the draft. During AT, the Contractor must perform an endurance trial. The propulsion motor must be operated at maximum achievable continuous r/min, subject to manufacturer's restrictions. During this endurance trial, the ship must be run through a certified measured course, once in each direction, at the maximum throttle setting to determine the maximum speed obtainable.

After completion of the quick-reversal tests, the propulsion system must be checked for loose items, oil leaks, fuel leaks, water leaks, hydraulic leaks, exhaust leaks and structural defects. Engine mounts and foundations must be checked for defects.

Fuel economy trials must be performed at 12 kt.

The ship must be operated to demonstrate the required maneuvering, speed and trawling capability.

The satisfactory operation of the ship's systems and equipment must be demonstrated.

The DPS must be fully demonstrated at sea before AT for a sufficient time by appropriate representatives in order to adjust the system parameters and demonstrate system capability to the Government and to the Contractor.

094b. Airborne Noise Survey

Airborne noise measurements must be made onboard the ship in accordance with Section 073. Measurements must be made in all compartments, spaces and locations and the sound pressure levels compared to the appropriate specifications. Tests must be conducted with all ship systems operating. All areas specifically identified as being covered by a noise specification must be measured.

Prior to the start of the test, the following items must be completed:

a. Inspect visually and aurally the compartments and spaces to be measured to finalize measurement locations. These locations must be the same in all tests.

b. As far as possible, ensure that the staterooms and spaces are essentially complete including carpets, curtains and furniture where fitted.

c. HVAC flow balancing.

d. The acoustic treatment survey, including resolution of deficiencies.

With the ship operating in accordance with normal underway operating conditions for 13.5 knot transit condition, stationkeeping and midwater trawling, the noise levels in the compartments and spaces of the ship must be measured. Measurements must be made at locations within a compartment or space that represent the general acoustic condition of the space and that are representative of locations normally occupied.

In staterooms, measurements must be made at the head of the berth(s) and at the desk. In public areas, measurements must be made at typically occupied locations. In machinery spaces, measurements must be made at watch standing positions, and/or gauge board, alarm, telephone, and those areas where extended occupancies can be expected. Weather deck locations defined in Section 073 must be measured. In passageways, measurements must be made about every 10 m.

As a minimum, two measurements per space, deck locations and sanitary spaces excepted, must be taken. Noise measurements are not required in closets and wardrobes. Data log sheets must be used. Measured levels must be compared with the specified compartment or space noise criteria where appropriate and as noted on the data log sheets. When a space fails to meet its criteria, additional measurements and observations must be made to define the cause of the failure. Comments must be made in the appropriate part of the data log sheet on any observed conditions that could compromise the noise survey.

094c. Structureborne Noise Survey

Structureborne Noise Survey. - The Contractor must perform a structureborne noise survey and record structureborne noise measurements of the equipment identified in Table 073-4

and any other equipment or machinery identified by the noise control engineering firm as noise critical and potentially affecting the noise signature of the ship.

Where identical items of equipment are installed on the ship in sets of two or more (i.e. generators, pumps, A/C plants, refrigeration plants, air compressors, etc.), each individual item in the set must be measured. Noise measurements of non-propulsion machinery may be made dockside. Constant speed components must be operated at normal load required for 100 percent full power load with the main propulsion plant inoperative. Variable speed components must be operated at speeds and loads which are required when the main propulsion plant is producing 50 and 100 percent of maximum continuous shaft horsepower.

Measurements must be performed in accordance with the procedures specified in MIL-STD-740-2, paragraphs 5.2 through 5.8, with the following exceptions:

a. Measurements must be made in one-third octave bands from 10 Hz to 20 kHz. At the location on each item of equipment with the overall highest level, narrowband measurements (minimum 400 line analysis) must be made over the frequency ranges 0-100 Hz, 0-2 kHz, and 0-20 kHz.
b. Locations of accelerometer blocks must be precisely recorded and photographed.
c. Measurements must be made on the foundation side, as well as on the machine side at resilient mounts.
d. One-third octave band measurements must be made at resilient piping connectors on the equipment identified in Table 073-4. Where identical items of equipment are installed[PA18], the unit that exhibits the highest overall vibration level based on the measurements in paragraph (a) must be used as the sample. Measurements must be made at inlet and discharge connectors on the equipment side and the piping side of the connectors.
e. Accelerometers used for measurement of frequencies above 10 kHz must be **Wilcoxon Model 736/737T or PCB Model 352A78, or Endevco Model 7254A-100**. Accelerometers must have sensitivities appropriate to the frequency and amplitude of the noise being measured.

Noise data must be provided in tabular and graphical form.

094d. Vibration Survey

An underway vibration survey must be performed following the procedures of SNAME Code C-1 and C-4. Single amplitude displacement must be measured for the hull girder, superstructure and mast with the ship underway in water with a minimum depth of five times the draft of the ship. A steady acceleration run of 5 to 10 r/min must be conducted to determine critical operating frequencies. Steady speed runs must be performed in 5 r/min increments from 1/2 full power r/min to full power r/min. Additional runs of smaller r/min increments must be taken to determine the maximum amplitude at critical shafting resonance frequencies. The vibration survey at the propulsion machinery must be performed in accordance with SNAME Code C-5. Vibration must be within habitability limits of SNAME Technical and Research Bulletin 2-25.

094e. Sonar Self-Noise Survey

Underway sonar self-noise tests must be conducted by the Contractor to demonstrate compliance with the sonar self-noise requirements in Section 073. The results of these tests must

be documented in a test report to be submitted to the Government for approval. The Government reserves the right to instrument the ship and to record sonar self-noise data concurrently with Contractor noise tests.

Underway sonar self-noise tests must be conducted from zero to maximum ahead ship speed in 1 knot increments, and steady state conditions, to determine the performance of sonars and sounders with respect to ship speed. The tests must be performed with the ship in normal underway operating conditions for hydroacoustic survey at 11 knots, midwater trawling and stationkeeping, at the normal trim and ballast condition. The sonar self-noise measurements must be conducted at 150 m and 500 m water depths, and at deep water where own-ship bottom reflected noise has been determined to have minimal impact on the sonar self-noise levels. Measurements must be made in an area free from contacts, both ship and land.

The sonar self-noise testing must include an acoustic calibration of the sonar and/or sounder using a reference far-field sound source.

One-third octave acoustic data from the ship's self noise monitoring hydrophones must be acquired in conjunction with sonar self-noise testing.

094f. Underwater Radiated Noise Trial Requirements

Underwater radiated noise tests must be conducted by the Contractor at a Government-approved acoustic range to demonstrate compliance with the underwater radiated noise requirements in Section 073. In addition, underwater radiated noise tests must include speed dependent and machinery dependent radiated noise measurements and hull vibration measurements adjacent to the propeller at 0 kt, 5 kt, 10 kt, 11kt, 12 kt, 13 kt and maximum ahead speed.

Results of all tests must be documented in a single test report to be submitted to the Government for review and approval prior to provisional acceptance of the ship. The Government reserves the right to instrument the ship and to record the associated measurement data concurrently with radiated noise tests.

Hull vibration measurements must be made using at least three vibration transducers attached to the hull plating above the propeller. During radiated noise measurements, the vibration transducer outputs, appropriately amplified, must be tape recorded and processed by the same procedures used for analysis of individual hydrophone signals.

One-third octave acoustic data from the ship's self noise monitoring hydrophones must be acquired in conjunction with underwater radiated noise trials.

The acoustic treatment survey, airborne noise survey and structureborne noise survey must be completed prior to the underwater radiated noise tests. The underwater radiated noise tests must be conducted after AT.

General requirements for the underwater radiated noise measurements, both near and farfield, are as follows:

Frequency Range	10 Hz - 50,000 [PA19]Hz
Bandwidth	1/3-octave band and narrow band (approx. 1 Hz bandwidth)
Reference Pressure	1 microPa at 1 meter
Reference Distance	1 meter

Frequency Range	10 Hz - 50,000 [PA19]Hz
Measurement Distance for Farfield	100 meters minimum
Water Depth	200 meters minimum for farfield
Sea Conditions	No whitecaps or breaking waves, ship roll or pitch does not cause water splash
Background Noise From Measurement Ship (If a Measurement Ship is Used)	Less than 2 dB increase over ambient in bands from 10 Hz - 50,000 [PA20]Hz
Allowable Measurement Errors	Acoustic measurement error not to exceed +/- 2 dB from 10 Hz to 50,000 [PA21]Hz

The test site must be chosen to provide adequate depth and maneuvering room, freedom from shipping and local traffic noise interference, freedom from severe thermal and density gradients and avoidance of nearby steep bottom slopes and avoidance of an acoustically highly reflective bottom.

The Trial Agenda for the underwater radiated noise trial must also include test schedules and must describe the test site. The test procedure must include plans for calibration of all instrumentation used in the measurements. The calibration plans must include provision for checking the calibration of the acoustic measurement and analysis system during the course of the test, as well as for pre-test and post-test calibrations.

Farfield Radiated Noise Measurement Procedures. - Measurements of steady state radiated noise and the noise from cyclic noise critical equipment made in the farfield of the ship must be the preferred method of characterizing the ship's radiated noise levels for all operational states for which such measurements are reasonably possible. Farfield measurements are not acceptable for a signal plus noise-to-noise ratio ((S+N)/N) of less than 3 dB in a one-third octave band; for those cases nearfield measurements are required.

During testing, the ship must operate in the condition specified in the test procedure for each test run. It must maneuver to a closest point of approach (CPA) of approximately, but not less than, 100 m from the measurement hydrophone buoy. A straight line course must be set 30 seconds before bow CPA, and no further course [PA22]or speed change must occur until end of run is signaled by the test director, except in emergency.

Measurements of farfield radiated noise must be made with a minimum of three omnidirectional hydrophones compliantly suspended from a buoy and at depths which cause the buoys to be equally distributed from 15 - 45 degrees depression angle from the ship. Signals from the hydrophones may be cabled or telemetered by radio link to the recording and processing station, where they must be appropriately amplified and recorded on an instrumentation-quality FM or digital tape recorder. If digital tape recording is used, it must be in ID-1 format.

Data providing continual information on the horizontal range between the measurement hydrophone buoys and the center of the ship being measured must be provided by either an underwater acoustic or a RF ranging system. If an acoustic system is used, it may not in any way interfere with the continuous ship radiated noise measurements. The range data, accurately time-linked to the acoustic measurement data, along with other appropriate supporting data such as ambient noise level, must also be tape recorded.

Each hydrophone signal must be individually filtered and power averaged in 1/3 octave bands and in narrow band (approximately 1 Hz bandwidth) format from 10 Hz to 50,000 [PA23]Hz. The signals must be averaged over 10 second periods.

Gain and hydrophone sensitivity factors must be applied during processing so that the resulting levels are uniformly referenced to one μPa. They must then be individually corrected for any contribution from background noise if the (S+N)/N is between 3 and 19 dB. Radiated noise measurements with (S+N)/N of less than 3 dB must be discarded, while measurements with (S+N)/N of greater than 19 dB require no correction. The background noise level, LN, must be measured in real time prior to the start of each run, with the ship at a range greater than 800 m from the measurement hydrophones.

Each 1/3-octave band and narrow bandwidth level from each of the measurement array hydrophones must be corrected to its 1 m equivalent level by applying an individual sound transmission loss correction. The distance used must be the average range between the center of the ship and the hydrophone over the 10-second signal averaging period. Transmission loss corrections must be determined as a function of range.

All of the measurement hydrophone outputs must be averaged together over the appropriate sector of the ship's aspect. These averages will be the averages of the radiated noise intensities represented by the individual equivalent 1 m levels. An average centered on the ship's beam aspect and covering the sector from the point of bow CPA to stern CPA is desired.

Four repeat test runs must be made for each ship operational state, and the radiated noise intensity spectra from all four runs must be arithmetically averaged to give the grand averaged spectrum for that operating condition. Port and starboard aspects must be considered as separate operating conditions.

One-third-octave band and narrow bandwidth averaged spectra in terms of equivalent 1 m source levels in dB must be reported on graphs comparing the results with those specified for the particular operational state. Port and starboard aspect data for the same ship operating state must be plotted on the same graph. Any frequency bands where the specified requirement is not met must be clearly identified.

094g. Mission Trials

All missions described in Section 070 must be demonstrated, including demonstration of trawling and over-the-side gear handling. [ECP 0054]Trawl nets, trawl doors, other fishing gear, mooring system wire rope for deployment of the mooring system using the net reel and gantry, and a 1.0 m^2 MOCNESS will be made available by the ConRep[ECP 0054]. Speed, maneuverability, propulsion plant power characteristics and machinery operations must be demonstrated and ambient environmental conditions recorded to establish compliance with ship performance requirements. Temporary fishing permits will be arranged by the ConRep. The Government reserves the right to place onboard other mission gear during trials, and to operate such gear on a not-to-interfere basis.

As a minimum, the following mission trials must be conducted:

a. **Midwater trawling**. - Operations must include movement of trawl doors from stowage positions to service positions, payout of trawl net with net reel and outhaul winch, trawl net transfer to trawl winch wires, trawl net set, tow at 1000 m depth and 3:1 scope, trawl net haulback and transfer back to net reel, trawl net recovery with net reel and Gilson winch, and trawl net cod end handling with heavy lift crane. Proper functioning of the fish finder system, trawl control system, acoustic net mensuration system and net sonde system must be demonstrated.

b. **Bottom trawling**. - Operations must include movement of trawl doors from stowage positions to service positions, payout of trawl net with net reel and outhaul winch, trawl net transfer to trawl winch wires, trawl net set, tow at 1000 fathom depth and 1.5:1 scope, trawl net haulback and transfer back to net reel, trawl net recovery with net reel

and Gilson winch, and trawl net cod end handling with heavy lift crane. Proper functioning of the fish finder system, trawl control system, acoustic net mensuration system and net sonde systems must be demonstrated.

c. **CTD cast**. – Operations must include lifting of a fully outfitted CTD system with each hydrographic winch and A-frame, deployment of the CTD system to 3500 m, haulback and recovery onto the deck. Proper functioning of the CTD deck unit and hydrographic winch slip rings must be demonstrated.

d. **Mooring deployment**. – [ERCP 0054]Operations must include installation of the portable trawl ramp cover, staging and deployment of a 3650 kg test weight ~~NOAA standard bottom mooring system~~ using the heavy lift cranes, stern gantry and net reel, and recovery of the bottom-moored device[ECP 0054]. Proper functioning of the acoustic release system must be demonstrated. [ECP 0054] The government will provide the wire rope for the net reel and the acoustic release.[ECP 0054]

e. **Methot trawl deployment**. – Operations must include oceanographic winch in constant line speed mode, and trawl deployment and recovery with the heavy lift crane and stern gantry.

f. **Hydrographic survey**. – Operations must include demonstration of proper operation of the scientific sounder system, acoustic doppler current profiler and multi-beam sonar system in conjunction with normal ship's navigation sonars.

g. **Scientific instrument tow**. – Operations must include lifting of a fully outfitted 1.0 m^2 MOCNESS with heavy lift crane, towing of the MOCNESS with a hydrographic winch and A-frame, and subsequent recovery of the MOCNESS with crane, A-frame and hydrographic winch. Proper functioning of the hydrographic winch slip rings must be demonstrated.

094h. Acceptance Trials

The vessel may not be presented for acceptance trials until it is determined by the ConRep that the Contractor has satisfactorily carried out those parts of its own builder's trials which the Contractor has deemed necessary to conduct a satisfactory acceptance trial for presentation to the Government.

Acceptance Trials (AT) will be witnessed by the ConRep and other Government observers. Subject to the ConRep's approval, representatives of manufacturers who have furnished ship components may be invited by the Contractor to witness trials. As a minimum, the SSVs for the propulsion system and the trawling system and the vendor for the integrated bridge system must attend AT.

094i. Final Acceptance Trials

The Government will conduct Final Acceptance Trials 30 to 60 days prior to the end of the guarantee period. The contractor must attend these trials and demonstrate that all discrepancies identified during prior tests and trials and all remaining warranty items have been corrected.

094j. Trial Schedule and Performance

The trial agenda must include the required trials and tests, and must indicate, in detail, the proposed procedure and data to be recorded.

The Contractor must notify the ConRep in writing of the desired date to perform the trials, provide the trial agenda and identify any special Government services required for the trial. The trial date and trial agenda are subject to the approval of the ConRep.

The ConRep will make arrangements with other Government activities, as requested by the Contractor, for services necessary to demonstrate satisfactory operation of installed ship equipment and systems.

Copies of each complete test procedure must be available for use by Government representatives. A tabulated list of tests not completed must be provided. After completion of AT and before official delivery of the ship, all Contractor-responsible work must be completed or resolved to the satisfaction of the ConRep.

Technical manuals must be made available to the Government during the trials. Before the trials, the Contractor must arrange to have onboard electronic technicians and data recorders, as necessary, to perform conclusive performance tests of electronic systems during the trials. Electronic systems (such as communications, radar, and such other systems) whose performance is affected by a restricted environment of the ship, must be scheduled in the trial agenda for testing during the underway portion of the trials.

094k. Technical Documentation

Trial/Survey Schedule. - A Trial/Survey Schedule must be prepared and include a complete listing of each trial and survey to be required by Section 094, and must provide dates for the conduct of each trial and survey.

Notification of Trials. - At least 60 days in advance of the proposed trial or survey date, the Contractor must notify the ConRep of the proposed date for trial or survey, provide the agenda, and identify any special Government services required for the trial. The Contractor must confirm the dates for trials at least 14 days prior to each scheduled date.

Trial Agenda. - A Trial Agenda must be prepared to present the Contractor's plan for conducting the required trial or survey and describe the procedure for documenting the results of tests, inspections, operations, and Mission Trials. The Trial Agenda must cover in detail the proposed procedures to be followed, the data to be collected and the trial displacement. An appendix to the agenda must include arrangements for measuring fluids, location of gauges, thermometers and all special instrumentation.

Trial Report. - The trial report documents the results of tests, inspections, and operations conducted during Trials. The trial report must be prepared for each trial or survey and must consist of the following information: cover, title page, table of contents, introduction and summary, trial agenda, and appendix (if required). The narrative summary must include trial conditions, conduct, and results including ship displacement, drafts and trim, kind of underwater paint and days out of drydock since last complete underwater painting, and list of underwater appendages not installed at time of trial. The trial agenda must be filled in with all the test and events results included. A list of uncompleted tests and reason for not completing must be included.

Airborne Noise Survey Report. - The Airborne Noise Survey Report must include the following information:

a. Compartments and deck stations that were measured, including specific positions of measurement locations in each space and at each station.

b. The assigned noise performance criteria for each location.

c. The noise levels measured at each location, with a comparison to the noise performance criteria.

d. Ship operating conditions for each measurement.

e. Annotation of special or unusual conditions applying to each measurement, as necessary.

f. Any noise deficiencies detected.

g. The approach by which the Contractor will correct noise deficiencies.

Vibration Survey and Structureborne Noise Survey Reports. - The Vibration Survey and Structureborne Noise Survey Reports must include:

a. Specific positions of measurement locations.

b. The vibration levels measured at each location, including a comparison to the vibration performance criteria.

c. Ship operating conditions for each measurement.

d. Annotation of special or unusual conditions applying to each measurement.

e. Any vibration deficiencies detected and the approach by which the Contractor will correct vibration deficiencies.

Sonar Self-Noise Survey Report. – The Sonar Self-Noise Survey Report must include:

a. Description of environmental conditions, including location (latitude and longitude), sea state, wind speed, water depth and bottom type for each measurement.

b. Description of the type, model number and precise location of each sensor used.

c. Sensor calibration results.

d. Ship operating conditions for each measurement.

e. The sonar self-noise measurements in 1/3 octave band graphical format for each required ship speed, underway operating condition and water depth.

f. Annotation of special or unusual conditions applying to each measurement.

g. Identification and quantification of the features controlling sonar self-noise, such as propeller cavitation, machinery noise, flow noise, bubble sweepdown and bottom bounce propeller noise.

h. Any deficiencies detected and the approach by which the Contractor will correct those deficiencies. Sonar self-noise measurements associated with these deficiencies must be presented in narrowband graphical format[PA24].

096 WEIGHT CONTROL

096a. Initial Weight Estimate

Within 120 calendar days after Contract Award, the Contractor must submit for approval an independently prepared detailed initial estimate of the light ship weight and center of gravity (vertical, longitudinal, and transverse).

This estimate must describe the weight and center of gravity of the ship in comprehensive detail, and must be prepared in a defined Work Breakdown System (WBS).

Approval action will consist of reaching a mutual agreement between the Contractor and the Government, as quickly as possible, on the light ship weight, center of gravity and margins. Thereafter, the Contractor is responsible for obtaining, in the completed ship, the approved weight and center of gravity characteristics, adjusted for authorized departures from the approved estimate.

Modifications in the construction of the ship, such as revisions in ship geometry, equipment and/or vendors that differ from the approved initial estimate, which result in departures from the approved light ship weight and/or center of gravity must be submitted to the Government for approval. Such submittals must include an estimate of the modification's effect on the weight and center of gravity of the ship. Such modifications may not be undertaken until written approval has been granted by the Government. Individual modifications, the effects of which change any one-digit WBS weight group by less than 250 kg, may be considered negligible and do not require written approval. Departures from the approved estimate resulting from corrections of errors or omissions, revised vendor data, actual scale weights, etc. do not require approval but must be incorporated into the next scheduled revision of the weight estimate.

At each 60 days after the approved initial weight estimate, the Contractor must submit a tabulation of approved departures and corrections and their cumulative effect on weight, center of gravity, and margin of the approved light ship, resulting in a revised weight estimate. Details of corrections must be included in these submittals.

A final weight report must be submitted at the time of delivery to bring the estimated light ship weight and center of gravity into reasonable agreement with the inclining results.

[Revision D] The approved lightship weight, centers and margins for the lead ship are provided below. These values include the effects on weight and moment of all ECPs through and including ECP 0053 except ECP 0048.

Item	Weight (mt)	VCG (m above baseline)	LCG (m aft of FP)	TCG (m from centerline, port +)
Lightship without margins, without ballast	1734.65	7.05	32.18	-0.01
Weight margin	52.04			
KG margin		0.30		
Lightship with margins, without ballast	1786.69	7.36	32.18	-0.01 [Revision D]

096b. Technical Documentation

Initial Weight Estimate. – The baseline weight estimate must provide a detailed estimate of the light ship weight and center of gravity (vertical, longitudinal and transverse).

Revised Weight Estimates. – Revised weight estimates must provide a tabulation of approved departures and corrections and their cumulative effect on weight, center of gravity, and margin of the approved light ship. Details of corrections must be included.

Final Weight Report. – The final weight estimate must provide the necessary changes to bring the estimated light ship weight and center of gravity into reasonable agreement with the inclining experiment.

097 INCLINING EXPERIMENT

097a. Inclining Experiment

An inclining experiment must be performed for each ship in accordance with 46 CFR 170.174 through 190, USCG NVIC 17-91 and ASTM F1321. Inclining experiments must be conducted no earlier than two weeks prior to Builder's Trials, if conducted, or three weeks prior to the Acceptance Trials, but in any case with the ship as complete as possible. As part of the inclining experiment, the Contractor must determine the period of roll of the ship.

A Trim and Stability Booklet must be prepared by the Contractor and approved by the Government and the Regulatory Bodies.

097b. Technical Documentation

Inclining Experiment Procedure. - At least two weeks prior to the inclining experiment the Contractor must prepare and submit the inclining experiment procedure to the Regulatory Bodies and to the Government.

Inclining Experiment Report. - A report describing the inclining experiment must be prepared in accordance with the requirements of ASTM F1321. The report must be submitted to the Regulatory Bodies and to the Government for approval not later than one week after the date of the inclining experiment.

098 MODELS AND MOCKUPS

The Contractor must develop a 1 to 10 scale physical model and a three dimensional computer model of the Working Deck and Side Sampling Station.

The models must include all elements necessary to demonstrate satisfactory operation of deck mission systems, including the trawl winch fairlead from below deck, the trawl gallows (with sheave positions), stern gantry, aft deck cranes, Gilson winch, outhaul winch, net reel, third wire winch, oceanographic winch, hydrographic winches, drop target strength winch and A-frame. The equipment required by Section 591m must also be modeled. Hatches, surrounding bulkheads, accesses to the ship interior, and remotely located deck machinery and rigging which is used in conjunction with the Working Deck must be included in the model. The ISO van site, the ACS, Side Sampling Station Control Booth and bridge wings, structure, foundations, piping (25 mm and over), ducting and ventilation, floodlights, accesses and walkways, deck fittings, deck machinery, grating, plating, capstans, and line handling equipment must be included in the model. The A-frame, gantry and cranes must operate to their full inboard and outboard positions. The computer model must demonstrate lines of sight from all control locations to controlled equipment. ConRep approval of the arrangement demonstrated by the model is required before the Contractor proceeds with construction.

The Contractor must also prepare a full-scale Bridge mockup to demonstrate compliance with the arrangement requirements of Sections 070 and 663.

Computer models must have the ability to change viewing perspectives and angles and lighting and shadow angles in real time. All surfaces of the computer model must be rendered as solids, as appropriate.

099 PHOTOGRAPHS

099a. Photographs

Color photographs must be provided, and will become the property of the Government with no restrictions. Digital photography must be employed, with a minimum resolution of 2.1 megapixels. Each photograph must be dated and identified as to location and view portrayed.

Progress photographs must be taken when the ship has reached 20, 40, 60, 80 and 100 percent completion. Photographs must also be taken at launching. Photographs must include interior and exterior views containing sufficient data so that equitable adjustments can readily be achieved in the event that Contract work ceases. Identification photographs must be taken prior to ship departure.

Inclining experiment photographs of the draft readings forward and aft, and the topside arrangements for inclining weight handling and measurement must be taken at the time of the inclining experiment.

099b. Technical Documentation

Photographs. – A set of photographs must be provided to the Government for each stage of completion. Photographs must be arranged by deck in sequence from fore to aft of the ship. Each photograph must be labeled. A complete set of photographs on CD-ROM must be provided.

==========

100 HULL GROUP

100 GENERAL REQUIREMENTS FOR HULL STRUCTURE

100a. General

Construction of the hull and superstructure up to the 01 Level must be steel. Superstructure above the 01 Level may be of either steel or aluminum construction. Use of explosion bonded bimetallic joint material (Deta-clad) is required for aluminum-to-steel joints.

Mill tolerance for steel and aluminum must be no greater than one percent.

Double continuous welding must be used in ballast tanks, water tanks, sewage system tanks, wet spaces, chain locker, sumps, transducer voids, bilges, foundations and structure exposed to weather on the stiffener side.

Oil and water stops must be provided at the ends of tank boundary plating and in continuous framing extending through tank boundaries. For adjacent tanks, stops must be provided on both sides of their common boundaries.

Except as otherwise specified, fairness of welded surfaces must be in accordance with ASTM F1053.

Attachments to bulkheads for supporting local weights may not impair the strength or tightness of the bulkhead. Insert plates, margin plates, special framing, and stiffening must be installed as necessary to distribute local stress. Where practicable, the attachments must be made to the special framing and not directly to the bulkhead structure.

Attachments of components to structural members may not reduce the strength of the member. Brackets, margin plates, doubler plates, inserts or special framing must be attached to the structure, and the components mounted thereto and not directly to the structure. Drilling or tapping flanges of structural members for the purpose of attaching supports for any equipment, foundations, pipe hangers, cableways, or similar items, is prohibited.

Strength members that are subject to high tensile stresses must be designed so that dependence is not placed on the strength of the metal normal to its plane of rolling. Where this is impracticable, through connections or other means must be provided to minimize the possibility of failure due to plate delamination.

The scantling draft must be a minimum of 6200 mm above baseline. Minimum molded deck height must be 2500 mm except between the Main Deck and 01 Level and between the 01 Level and 02 Level where the minimum molded deck height must be 2750 mm.

100b. Foundations

Foundations must be arranged to provide clearance for disassembling parts, such as circulating pumps, filters, air coolers, pistons, stators, valves, and rotors, without dismantling other machinery, structure or piping.

Foundation designs must consider the loads imposed by operation of the equipment as well as the loads due to ship motion.

100c. Special Structural Requirements

[ECP 0041]The Aft Working Deck~~, 01 Level aft,~~ and the Side Sampling Station decks must be designed as an exposed cargo deck with a design load of 7,950 kg/m^2.[ECP 0041] Deck

plating in this region must be no less than 12.0 mm plating. The deck-to-shell connection on the exposed Main Deck must be rounded with a 150 mm radius. No coaming is to be installed in this area.

[ECP 0041] The 01 Level aft deck must be designed as an exposed cargo deck with a design load of 2,636 kg/m^2.[ECP 0041]

The Working Deck, 01 Level aft, and Side Sampling Station deck must be capable of accepting the loads which can be imparted by any four deck bolts located in a continuous row, loaded axially to 22 kN each. Underdeck strengthening must be provided at the ISO van stowage location to withstand loading imposed by stowage of an ISO 1CC van, each with a maximum gross weight of 6,820 kg. ISO container corner fittings must be permanently installed flush in the deck at van stowage locations.

The centerboard trunk scantlings must be designed in accordance with ABS Deep Tank requirements for a head to a point 2750 mm above the main deck, or to the requirements for the exposed superstructure or bulkhead appropriate to the deck level, whichever is greater. The centerboard trunk must be vented to weather at a point just below the top of the trunk.

The transom and the side shell in way of the stern gantry, crane towing points, A-frame, and other outboard fairlead block supports must be designed in accordance with ABS recommendations for vessels subject to impact. [ECP 0042, ECP 0050]The shell plating in these regions must be no less than ~~19~~ 12.7 mm plating, and must extend from the Main Deck to a point 600 mm below the design waterline.[ECP 0042, ECP 0050]

[NECP 001]The hull and transom in the vicinity of the gallows, and where trawl doors and other over-the-side equipment may contact, must have diagonal rub strips of approximately 150 mm diameter Schedule 80 split pipe on ~~300~~ 600 mm centers. [NECP 001] The rub strips must be preserved and provided with sealed ends. [ECP 0049]The ~~thickness of the~~ sides of the trawl ramp must be abrasion resistant steel, at least 10 percent greater in thickness than that required by ABS Rules for the side shell, and in no case less than ~~19~~ 12.7 mm.[ECP 0049] The trawl ramp must be in accordance with Section 591.

100d. Bilge Keels

[NECP 001]The ship must be provided with bilge keels ~~as shown on the Project Peculiar Documents~~located and shaped in accordance with DTRC Report 50-TR-1999/035, but with a total wetted surface of 24.66 m^2. [NECP 001] The bilge keels must be of watertight construction, must have well-rounded edges and no exposed framing, and may not extend outboard past the maximum beam of the ship. Volume enclosed by bilge keels must be treated as a void.

100e. Bulwarks

The Working Deck area must be provided with bulwarks except where this may interfere with deck operations or equipment. The weather deck area forward of the forward superstructure bulkhead must be fitted with bulwarks with freeing ports in accordance with ABS Rules. Bulwarks aft must be configured to provide full-length freeing ports. No bulwark is to be provided in way of the Side Sampling Station.

Two adjacent removable bulwark sections must be provided, port and starboard on each side of the Aft Working Deck to accommodate buoy and mooring operations. Removable bulwark sections must be 2400 mm long.

Removable bulwarks must be capable of being stowed against fixed bulwark sections.

[ECP 0047]The forward half of the top of the Bridge must be provided with bulwarks. The forward bulwark must be 1200 mm high above the deck covering. The aft end of the bulwark must

be 1000 mm high. ~~Side bulwarks must join the forward and aft bulwarks~~Pipe rail must be provided around the aft half of the top of the Bridge.[ECP 0047]

100f. Deck Fittings and Tiedowns

Threaded deck sockets and reversible padeyes must be provided all exposed portions of the Main Deck. The deck sockets must be arranged in a square grid pattern on 1200 mm centers, with the innermost rows each 600 mm off centerline to port or starboard. All fore and aft rows of sockets must be parallel to the centerline. Threaded deck sockets may not be provided on the trawl ramp, in the trawlway, on hatch covers, or on the Main Deck aft of the top of the trawl ramp.

All exterior threaded deck sockets and reversible padeyes must be in accordance with Figure 100-1. A padeye must be installed in each socket at delivery of the ship. Two “T” wrenches must be provided for the padeyes at delivery of the ship.

Exterior threaded deck sockets, padeyes and deck structure must be designed for a safe working load in the axial direction of 22 kN. All deck sockets must be CRES. Bolts and eyebolts must be brass.

Neither the padeyes, when seated in their stowed position, nor the sockets may extend above the finished surface of the deck. Deck socket installation may not compromise watertight boundaries.

[NECP 001]The interior of all laboratories must be provided with nominal ~~19~~ 10 mm diameter deck sockets and threaded bolts for use with portable equipment~~.~~ [NECP 001] Interior deck sockets and bolts must be provided in a 600 mm grid pattern, located in line with the overhead Unistrut sections required by Section 667. Deck sockets must be flush with the finished surface of the deck.

ISO deck fittings, such as **Peck and Hale raised deck socket, part number F655-1**, with **cover, part number F700-10**, and tiedowns, such as **Peck and Hale twist-lock stackers, part number F656**, must be provided at the van stowage site.

Figure 100-1. Deck Sockets and Reversible Padeyes

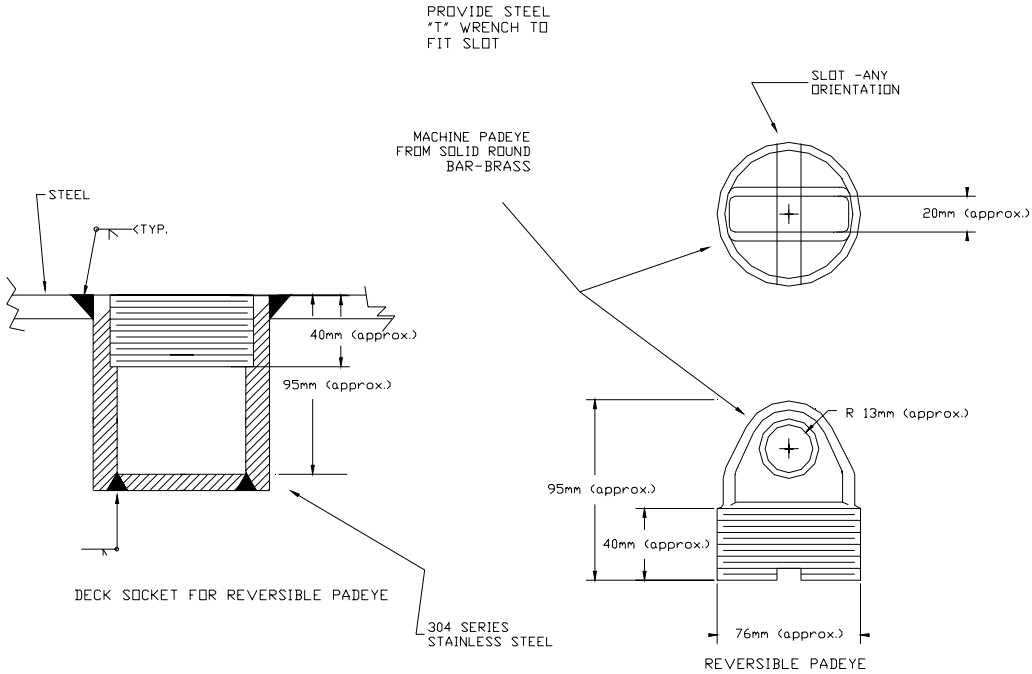

100g. Openings

Openings in any part of the ship's structure, including those parts that do not contribute to the strength of the ship, must have radiused corners. The corner radius of openings in decks, shell and inner bottom tank top must be generally 1/8 the transverse dimension of the opening, with a minimum of 150 mm and a maximum of 600 mm. Cuts in non-structural bulkheads must have at least a 25 mm radius. In longitudinal structural bulkheads and in deckhouse sides, the radius must be 1/8 of the vertical dimension of the opening, but need not exceed 150 mm. In transverse structural bulkheads of considerable extent, such as main transverse bulkheads, the radius must be 1/20 of the vertical dimension of the opening, with a minimum of 25 mm. In transverse bulkheads of lesser extent, such as racking webs, the radius must be 1/10 of the vertical dimension of the opening, with a minimum of 25 mm.

100h. Equipment Removal Plates

Bolted Equipment Removal Plates (BERPs) or Welded Equipment Removal Plates (WERPs) must be provided for equipment or components that cannot be removed through hatches or doors. Removal of the BERPs or WERPs may not require the removal of other fixed ship structure. Ancillary systems must be kept clear of BERP or WERP openings. If, because of normal operating wear, an equipment can be expected to require removal every eight years or less, a BERP must be used for removal. For longer periods, a WERP is acceptable.

100i. Centerboard

A retractable centerboard must be provided as shown on the Project Peculiar Documents. The centerboard must be hydrodynamically shaped to reduce drag, avoid cavitation and prevent flow separation at normal operating angles of attack. Centerboard fairness must be in accordance with Section 073e. [NECP 001]The centerboard must have a ~~nominal NACA 0020~~ section as ~~follows:~~shown on the Project Peculiar Documents.

~~x/c~~	~~Half Breadth, mm~~
~~0.05~~	~~192~~
~~0.10~~	~~250~~
~~0.15~~	~~284~~
~~0.20~~	~~305~~
~~0.30~~	~~318~~
~~0.40~~	~~306~~
~~0.50~~	~~279~~
~~0.60~~	~~241~~
~~0.70~~	~~193~~
~~0.80~~	~~137~~
~~0.90~~	~~74~~

[NECP 001]

Transducers for the Scientific Sounder (38 kHz, 120 kHz and 200 kHz), Acoustic Doppler Current Profiler, Acoustic Net Mensuration System, Acoustic Release System and one self-noise hydrophone must be located in the bottom of the centerboard. [NECP 001]In addition, one unused mount for a minimum 305 mm diameter transducer must be provided and covered with a blank flange. The diameter of the unused mount must be maximized. [NECP 001] Transducer locations and orientations on the centerboard must be in accordance with manufacturer's recommendations, as approved by the ConRep. A cable tensioning system must be provided to prevent transducer signal cables from fouling during centerboard movement.

The centerboard and associated trunk must be configured such that the centerboard can be removed upward through the ship for servicing while the ship is afloat. BERPs must be provided in the deck on the Bridge and the top of the House for this purpose. Internal centerboard cabling and transducer mounting locations must withstand flooding of the centerboard without damage.

The centerboard lifting mechanism must allow the centerboard to be placed in at least four operating positions: maintenance, retracted, intermediate and lowered. The lifting mechanism must be capable of fully raising or lowering the centerboard within 60 seconds at ship speeds up to five knots. The centerboard must be provided with a locking mechanism which must positively hold the centerboard in each position and restrain the centerboard so that relative motion between the centerboard and the ship structure does not create radiated noise or degrade operation or accuracy of centerboard mounted transducers. The total angular displacement of the bottom of the centerboard due to relative motion between the centerboard and the ship structure under an operating condition load of 12 knots with a 10 degree yaw may not exceed 30 minutes of arc in any plane. In this loading condition, the centerboard-to-hull interface may not create noise or a wear point.

[NECP 001]In the retracted position the centerboard and the faces of all transducers may not extend below the local keel at the aft end of the centerboard and must permit operation of all transducers except the acoustic net mensuration system transducers. [NECP 001] In the lowered position the centerboard must extend 3750 mm below the local keel. In the intermediate position, the centerboard must extend 2000 mm below the local keel.

The centerboard transducers, cabling and connections must be accessible for maintenance from a locked hatch on the Second Deck while the ship is afloat and the centerboard is in the maintenance position.

Master controls for raising, lowering and locking the centerboard must be provided on the Bridge. A secondary control for local operation during maintenance must be provided adjacent to the centerboard trunk in a position that allows observation of movement of the centerboard and support carriage through a trunk hatch or door. A selector switch on the master control must provide selection of operation by either the master or the local control. A run-stop permissive switch and an emergency stop switch must be provided at both control stations. A watertight emergency stop switch must also be provided on the centerboard trunk approximately 1000 mm above the Second Deck in a position easily accessible for maintenance. Centerboard position indicators must be provided at the master and secondary control stations and in the Acoustic Laboratory. A means of visually confirming centerboard position must also be provided. A secondary powered means of raising the centerboard must be provided.

162 STACK

The stack must be configured to prevent stack gas impingement on the Working Deck area, diver's air compressor intake and Marine Mammal Observation Stations. The stack must enclose all diesel engine and incinerator exhaust systems, except for the emergency diesel generator.

170 MAST AND FLAGSTAFF

A mast with signal yardarms, gaff and mounting brackets for navigation and electronic equipment must be provided. Fittings must be provided for the hoists required by Section 613. The mast and yardarms must be designed to permit servicing of navigation lighting, electronic equipment, and scientific instrumentation and must be equipped with safety features in all work locations.

A foremast must be provided. The foremast must be hinged at the base for lowering at sea.

Masts must be designed based on a minimum factor of safety of 2.5 of the welded yield strength of the material. Masts and equipment foundations on the masts must be capable of withstanding the dynamic forces required in Section 070.

A jackstaff must be provided at the bow, and a removable flagstaff with mounting fixture must be provided at the transom.

184 NAVIGATION SYSTEM ALIGNMENT

A master reference system must be provided, consisting of a granite or CRES reference block aligned to the design waterline to within 5 minutes of arc in all axes. The block must be supported in a steel box by 12 threaded rods, which are also to be used to position and level the block. After installation and alignment of the reference block to the satisfaction of the ConRep, the block must be fixed in the box with poured epoxy.

Unless otherwise specified, navigational and sonar systems must be aligned to the master reference system in accordance with the manufacturer's recommendations, but in no case to a tolerance of greater than 30 minutes of arc. Local benchmarks must be provided at each transducer location, in the centerboard trunk at the centerboard maintenance position, at the Inertial Reference System inertial measurement unit and GPS antennas, and at the gyrocompasses. Centerboard-mounted transducers must remain aligned to the ship's reference

plane and azimuth within +/- 30 minutes of arc in all axes in the four centerboard operating positions defined in Section 100.

191 FIXED PERMANENT BALLAST

Fixed permanent ballast must be provided in the quantity and location needed to meet the requirements of Section 079. [NECP 001]Fixed permanent ballast must be a non-corrosive material, such as **Genstar Ballast-Crete** or small ingots, capable of being ~~pumped for installation and subsequent removal, and~~installed and removed through normal access points. The fixed permanent ballast must be composed of inorganic non-toxic ~~granular and ground fines mixed with water,~~material which will not support microbiological growth nor generate toxic or flammable gases. [NECP 001] The ballast must form a stable, firm mass to prevent shifting, thereby eliminating any possible free surface effect on the ship.

The ballast material and installation must conform to all Regulatory Body requirements including Coast Guard NVIC 5-82.

==========

200 PROPULSION PLANT

200 PROPULSION PLANT, GENERAL

200a. General

The ship must be single screw, with a fixed pitch propeller driven by a direct drive integrated diesel electric propulsion system. All propulsion and ship service electric power must be generated by an electric plant consisting of four AC diesel generator sets. The generator sets must consist of two larger and two smaller rated sets of the same manufacturer and engine model series. The generator set ratings must be chosen such that the plant is capable of meeting the mission profiles of Table 070-1 and the operating requirements of Section 300 with the most fuel efficient combination of generators operating and any one generator set off the line. The electric plant must be designed such that any single generator can supply power to the main switchboard.

The propulsion equipment and mounting systems must be in accordance with Section 073. The propulsion system must meet the requirements of ABS for electric propulsion systems.

Single System Vendor. - The Contractor must select a Single System Vendor (SSV) who is responsible for the overall engineering design, integration, testing and supply of the electric drive system of the integrated plant including, but not limited to:

a. Main Propulsion Motor(s), Propulsion Motor Controller(s) and interconnecting cabling
b. Ship Service/Propulsion Generators, Emergency Generator
c. Propulsion, Ship Service and Emergency Switchboards, transformers, and isolation transformers[PA25]
d. Machinery Control System

The SSV must be experienced in marine electrical propulsion plants and controls and must have experience as a supplier of electrical control system equipment for this type of application. The Contractor is prohibited from acting as the SSV.

The SSV is responsible for the system design and integration of the various system equipment and sensor interfaces. In addition, the SSV must integrate the main diesel generator sets, emergency diesel generator set, main propulsion motor, and bow thruster motor into the machinery and ship control systems, and take into account the electrical characteristics of this equipment in order to assure the design of the ship's combined electrical system is fully integrated and meets the electrical performance and noise requirements herein.

The Government must be notified and invited to witness factory acceptance testing of all equipment and systems for which the SSV is responsible. Test procedures and reports for all factory acceptance tests must be prepared.

The SSV must provide a propulsion system "ship rider" during the guarantee period following ship delivery, to assist the crew with troubleshooting, calibration, adjustment and repair of SSV-supplied equipment. A total of 60 days of riding engineering services over a maximum of 15 trips must be provided at the request of the ConRep, and may be scheduled at different times throughout the guarantee period. The Contractor must document field changes and modifications made during the guarantee period. Technical manuals, drawings and other documentation must be updated to reflect all such modifications.

200b. Technical Documentation

The following SSV-related technical documentation must be prepared:

a. Correspondence with Regulatory Bodies.
b. System harmonic analysis.
c. Subtransient reactance calculations.
d. Regenerative analysis.
e. Machinery Control System console face arrangements.
f. Noise reduction measures incorporated in the design.
g. Machinery Control System Programmable Logic Controller (PLC) locations.

202 MACHINERY CONTROL SYSTEM

202a. General

The Machinery Control System (MCS) must provide integrated control and monitoring of the machinery plant, including the propulsion system, electric plant, diesel engine prime movers and auxiliary systems.

Monitoring and control panels required by ABS must be provided in the engineers' staterooms, Lounge, and the Bridge. A summary alarm for non-vital conditions must also be provided on the engineers' staterooms and Lounge panels. An engineer call system and dead man timer function must be provided. Rotating beacons and audible alarms must be provided in each machinery space to alert watch standers of alarm conditions at the MCC.

The system must include control and monitoring stations with the capabilities listed in Table 202-1.

Table 202-1. MCS Control Station Capabilities

Station	Location	Capabilities
Main Control Console (MCC)	EOS	Control and monitoring of all propulsion plant and auxiliary machinery plant parameters.
Ship Control Console (SCC)	Bridge	Single lever throttle control/engine order telegraph, steering control, DPS control, bow thruster control. Monitoring of propeller r/min, rudder angle and bow thruster speed and angle. Monitoring of propulsion and auxiliary machinery plant parameters and alarms.

Station	Location	Capabilities
Aft Control Station (ACS)	Bridge (Aft Control Station)	Single lever throttle control/engine order telegraph, steering control, DPS control, bow thruster control. Monitoring of propeller r/min, rudder angle and bow thruster speed and angle.
Port and Starboard Bridge Control Stations	Bridge (Port and Starboard)	Single lever throttle control/engine order telegraph, steering control, bow thruster control. DPS control at Starboard Station. Monitoring of propeller r/min, rudder angle and bow thruster speed and angle.

202b. Control and Monitoring Requirements

The Machinery Control System must permit complete throttle operation and control over the full range of plant operation from all control stations in accordance with regulatory body requirements, without intervention of engineering personnel. Control transfer between stations must require matching of throttle levers, to ensure bumpless transfer. The control and monitoring system must be designed for primary control and monitoring from the MCC, with normal operation from the Bridge. However, the MCS must permit the Main Control Console to take control from any remote control stations without Bridge personnel action in the event of a casualty.

The Main Control Console and Chief Engineer's stateroom must each be provided with at least two 510 mm color displays to display system mimics of the propulsion system, electric plant, diesel generators including prime movers and auxiliary systems. The displays must display all control and monitoring parameters and system alarms as required by regulatory bodies. The displays must provide equipment/system control via keyboard and/or captive pointing device. During plant operation, the MCS must continuously monitor temperatures, pressures, flows, levels and electric load characteristics. The MCS must be designed to initiate automatic start of standby equipment upon failure of the operating unit and provide notification of the casualty and corrective action. All plant data must be viewable at both the Main Control Console and the Chief Engineer's stateroom.

The MCS control algorithms must prevent overloading of the electric plant prime movers by limiting propulsion power and sounding an alarm to allow automatic start-up and paralleling of a designated standby generator. Once the standby generator is on-line the MCS must adjust the propulsion plant to meet order commands.

202c. System Interfaces

The MCS must be the interface between propulsion and bow thruster controllers and the Dynamic Positioning System.

The Machinery Control System must make use of Programmable Logic Controllers (PLCs) for control and monitoring signal processing and system logic. The control and monitoring system architecture must be designed to provide distributed location of vital control and monitoring signals between PLCs. The Contractor must propose PLC locations based upon signal concentration points in the machinery spaces. The proposed PLC locations and signal loading information per PLC, with 15% signal growth allowance per PLC, must be documented and provided to the Government.

The MCC must have the capability to interface with a personal computer to download machinery performance data for trending. This interface must be by a single cable.

233 DIESEL ENGINES

233a. General

Diesel engines and generators must be designed and constructed for marine service in accordance with IEEE Std 45, and approved by ABS for continuous service. Engines and generators must be integrated packages, each mounted on a common subbase.

The electric plant diesel engines must be four-stroke cycle, 1800 r/min engines designed, constructed and installed in accordance with Section 073. Four 600 VAC diesel generator sets must be provided. The diesel generator sets shall be of the same engine family in two different sizes to allow maximum operational flexibility, such as two **Caterpillar 3512B DITA** of minimum 1360 kW (generator output, 60 Hz @ 0.8 PF) continuous rating, and two **Caterpillar 3508B DITA** of minimum 910 kW (generator output, 60 Hz @ 0.8 PF) continuous rating. Engine rating must be based on ISO 3046, using standard atmospheric conditions of 100 kPa and 25 degrees C inlet losses of 2.5 kPa and exhaust losses of 6.7 kPa, using the fuel oil specified in Section 070.

Diesel engines must be provided with all accessories recommended by the manufacturer for continuous service at sea.

An engine jacket water heating system must be provided, designed to maintain 49° C jacket water temperature when the engine room ambient temperature is 0° C. The system must automatically shut down when the engine is started, and must start up when engine jacket water falls below 46° C.

Each air intake filter must be equipped with a differential pressure indicator which must remain in the warning position whenever a high differential pressure occurs until manually reset.

Each engine must be equipped with a thermostatically controlled fuel supply heater designed to heat the supply fuel from the service tank to a maximum of 32° C. Warm fuel, 21° C and above, must automatically bypass the heater.

Engine governors must be of the electronic type, with performance characteristics supporting the electric power quality requirements of Section 300.

If air starting is used, an air starting motor lubricator is required.

If the diesel engines are equipped with electric prelube pumps, each must be interlocked with the engine starting system to prevent engine starting until main lube oil gallery pressure reaches a preset value as determined by the engine manufacturer. The system must automatically shut down upon a successful engine start. A manual prelube pump must also be provided.

Engines equipped with multiple turbochargers must be supplied with a flexible exhaust connection between turbochargers and engine common exhaust ducting so that each engine has a single exhaust line leading to its respective muffler. Diesel engine exhaust systems must contain a normally closed pressure sensing port for a water manometer connection, located as recommended by the engine manufacturer.

233b. Local Instruments, Controls and Alarms

A local control station must be provided for each diesel generator and located in the engine room near the diesel engine served. Controls and instrumentation on each panel must be as recommended by the engine manufacturer and as required by Regulatory Bodies.

235 ELECTRIC PROPULSION SYSTEM

The propulsion motor(s) must be low voltage DC, rated for continuous operation at 2250 kW and 134 r/min, **Teco-Westinghouse Model 994101JRM, or Ansaldo Model DHT 900 Z73 FD4 SCO/60H**, or equal. Reduced capacity redundancy of propulsion power must be provided by multiple motors on a common shaft. The propulsion motors must be in accordance with Section 073 and IEEE Std 45.

The propulsion motors must be controlled by 12-pulse or 24-pulse SCR type, variable speed controllers, powered from the main switchboard bus via shielded input isolation transformers. The power converters must be powered directly from the propulsion bus and must provide full speed control from zero to maximum r/min ahead and astern.

243 PROPULSION SHAFTING

243a. General

The main propulsion shafting system must include all necessary shafting, couplings and components to connect the propeller to the main propulsion motor(s). The propeller shaft must be equipped with a take-down connection to allow removal through the stern tube without cutting either the shaft or ship's structure. [ECP 0040] Propeller shafting may be bored, provided regulatory body requirements are met.[ECP 0040]

A shaft brake must be provided, capable of holding the shaft stopped in a 3 knot current[PA26]. [NECP 001]~~The shaft brake must be operable from all control stations. The shaft brake controls must be interlocked with the propulsion control system so that shaft speed is reduced to zero, at the maximum acceptable rate, when the shaft brake is activated.~~Indication of shaft brake operation must be provided to the machinery control and alarm system. [NECP 001]

A shaft lock must be provided.

243b. Technical Documentation

Shaft Alignment Analysis. - An alignment analysis of the propulsion shafting system must be prepared. The alignment analysis must determine proper waterborne alignment and must include the following:

a. A labeled line diagram of the shaft bearing system indicating dimensions, locations of bearings, types of bearings, and assumptions used in performing the analysis.

b. A table of bearing reaction influence numbers of each bearing for a 0.025 mm vertical change in position with respect to itself and the other bearings in the system.

c. A table showing bearing reactions and bearing pressures for each bearing for the following conditions:

   1. Waterborne alignment condition.
   2. Maximum allowable weardown condition.
   3. Machinery and foundation cold and hot conditions.

d. A table of bending moment, shear, and deflection of the propulsion shafting system for each of the above alignment conditions. Values must also be plotted.

e. Weardown of oil lubricated bearings may be ignored.

f. No bearing reaction may be less than 900 kg in the hot operating condition.

The vendors of the propulsion motor system and propulsion shafting must be consulted regarding the alignment criteria of these units. These criteria must be included and form a part of the shaft alignment analysis.

244 PROPULSION SHAFT BEARINGS AND SEALS

244a. General

Line shaft and thrust bearings must be of the self-aligning type. Line shaft and thrust bearings may be of the hydrodynamic or anti-friction type. If anti-friction type bearings are used, they may only be used as interior bearings. Anti-friction bearing may be tapered or spherical roller bearings. The maximum allowable static bearing load based on projected area may not exceed 515 kPa.

244b. Thrust Bearings

An oil lubricated thrust bearing must be provided. The thrust bearing configuration must permit ready inspection, maintenance, repair and adjustment of axial clearances.

244c. Lineshaft Bearings

Lineshaft bearings must be oil lubricated. If hydrodynamic sleeve bearings are used, they must be disc lubricated. ASTM B23 grade 2 babbit metal is required for sleeve type bearings.

The lower half of lineshaft bearings must be watertight. Bearings must have an oil vent assembly to prevent pressurization of the bearing cavity.

The criteria for the number and location of lineshaft bearings must be governed by the shaft alignment and vibration analyses.

244d. Stern Tube Bearing

The stern tube bearing must be of environmentally safe and acoustically inefficient materials. Bearings must be of a water-lubricated, synthetic elastomeric polymer alloy, split journal configuration, **Thordon Compac,** or equal. Bearings must be selected to ensure that no shaft squeal affects underwater radiated noise signature at any speed.

244e. Stern Tube Seal

A forward stern tube seal must be provided.

The seal assembly must consist of a primary radial hard face mechanical seal that allows for relative axial, radial, and angular shaft motions.

Parts of the seal exposed to seawater must be made of corrosion resistant material and must be suitable for easy repair in service. Provision must be made in the seal mounting ring for cooling and lubricating the seal in accordance with the manufacturer's recommendations.

The seal must be split to allow for replacement of wearing elements and change of rubber components without shaft removal.

245 PROPULSOR

[ECP 0052]The propeller must be fixed pitch, shaped and located in accordance with the Project Peculiar Documents~~ and an IGS propeller surface file of the propeller geometry that will be provided by the Government~~. [ECP 0052] Propeller blades must be bolted to the hub.

245a. Manufacturing Tolerances

The propeller must be manufactured to Class I manufacturing tolerances as described in NAVSHIPS No. 810-4435837, as modified herein. Inspection and certification procedures must be in accordance with NAVSEA Technical Manual S9245-AR-TSM-010/PROP, as modified herein.

The Contractor must provide inspection gauges.

The standard manufacturing, inspection and certification procedures must be modified as follows:

a. **Blade Root Fillets. -** The blade root fillets have been generated by the designer and are fully contained within the IGS surface file of the propeller geometry. The minimum fillet radius must be 25 mm. The accuracy of the fillet must be checked with standard radius gages at the leading edge, trailing edge and 20, 40, 60, 80% root chord on both the back and face of the blade. The clearance between radius gage and fillet may not exceed 0.80 mm.

b. **Tip Edge Gages. -** Four tip edge gages must be applied. These gages must be derived from planar cuts through the blade tip. The planes must be approximately defined to be perpendicular to the blade chordline at 0.95R and pass through and extend to the following 0.95R fractional chord positions:

At 0.95R, fraction of chord = 0.2, 0.4, 0.6, 0.8

The maximum clearance between tip gage and blade must be 0.40 mm. As part of the standard gauging process, a tip contour gage must also be applied.

c. **Leading and Trailing Edge Gages. -** Leading and trailing edge gages must be applied at the following seven fractions of tip radius:

r/R= 0.3, 0.4, 0.5, 0.6, 0.7, 0.8, 0.9

These gages must be rolled to match the radius at their application. For leading edge gages, a clearance of 0.25 mm must be maintained between gage and blade. For trailing edge gages, a clearance of 0.80 mm must be maintained.

245b. Line Cutting System

A propeller hub-mounted line and net cutting system, such as **Spurs Model LV48/40**, must be provided and installed in accordance with the manufacturer's instructions.

252 ENGINEER'S OPERATING STATION

The Engineer's Operating Station (EOS) must be an air-conditioned space and must contain the Main Control Console, main switchboard, alarm panels, interior communications and other equipment associated with machinery control. The EOS must have immediate access to the Machinery Room upper level, the propulsion electric switchgear, converters, transformers and associated electric propulsion equipment.

256 MACHINERY COOLING WATER SYSTEMS

256a. Diesel Engine Jacket Water System

Diesel generators must be cooled by fresh water circulated through the engine jackets and lubricating oil coolers by attached jacket water pumps. Jacket water must be cooled by jacket water to seawater heat exchangers. Heat exchangers must be installed inside the ship, must be of the flat plate type, and must maintain jacket water outlet temperature and lubricating oil temperature in accordance with the manufacturer's recommendation.

The jacket water cooling system must be utilized to provide waste heat to the fresh water distillers. The connections to the distillers must be located downstream of the return connections from the diesel engines.

256b. Main Seawater System

The main cooling water system must be in accordance with Sections 073 and 505.

The main seawater system must provide cooling to the diesel engine jacket water system, propulsion motors and the propulsion thrust bearing. The diesel generator seawater cooling system must be supplied by two main seawater pumps from two sea chests separated port and starboard to the maximum practical extent. The sea chests must be cross-connected by a main and auxiliary seawater suction main. The cross-connection must be sized to provide the total seawater demand from either sea chest to the main seawater pumps at positive pressure. A duplex strainer and cutout valve must be provided just downstream of each sea chest cutout valve. The seawater cooling system discharge from the diesel engines jacket water coolers must be combined and led to a single properly sized discharge main with discharge connections on the port and starboard sides, as far aft in the Main Machinery Room as practicable. Isolation valves must be provided in the supply and discharge line for each diesel engine. [NECP 001]A swing-check valve must be provided in each pump discharge line. ~~A valved sea chest cleanout line must be provided from the main seawater cooling system discharge piping to each sea chest.~~[NECP 001] A blowdown hose valve must be provided for each sea chest.

259 DIESEL ENGINE COMBUSTION AIR AND EXHAUST SYSTEMS

The ship must be provided with air supply and exhaust systems for the diesel engines.

The combustion air and exhaust systems must be in accordance with Sections 073.

The exhaust gas from each engine must be discharged into a separate insulated exhaust pipe and a spark arrester dry-type exhaust silencer and through the stack.

The combustion air supply and exhaust systems must be sized to be within manufacturer's respective minimum and maximum pressure limits. Combustion air and exhaust system pressure drop calculations must be performed for each diesel generator to substantiate that acceptable pressure limits are attained.

261 FUEL SERVICE SYSTEM

A complete fuel service system must be provided. Fuel service pumps must take suction from the Fuel Oil Day Tanks through a common suction line fitted with a duplex strainer. If engine-mounted fuel service pumps are provided, filter/separators must be provided for each pump. The Fuel Oil Day Tanks and fuel service pump suction piping must be designed to provide positive head at the service pump suction during normal operating conditions. The return line from the diesel generator sets must enter the top of each Fuel Oil Day Tank. The fuel oil supply and return lines must be fitted with flexible connections at the engines in accordance with Sections 073 and 505. Each day tank must be sized for at least 24 hours of operation at 13.5 knots.

262 LUBRICATION SYSTEMS

Lubrication systems must be in accordance with Sections 073 and 505.

Lubrication systems must be provided for the diesel generator sets, propulsion motor(s) and the propulsion thrust bearing. The same type of oil must be used for all three systems, if approved by the manufacturers.

[NECP 001]The diesel engine lubrication transfer system must permit transfer of oil from storage or settling tanks to sumps, transfer of used oil from sumps to waste oil tanks, filling of storage tanks from shore, and discharge of clean and used oil to shore. [NECP 001] [PA27]The transfer system for diesel engines must be segregated from other lube oil transfer systems.

Lubricating oil storage tanks must be sized to accommodate the manufacturer's recommendations for one complete changeout of all sumps, plus makeup lubricant for 60 days.

==========

300 ELECTRICAL GROUP

300 GENERAL REQUIREMENTS FOR ELECTRIC PLANT AND CABLING

300a. General

The electric plant must be designed, constructed and configured in accordance with Figure 300-1 and IEEE Std 45, "IEEE Recommended Practice for Electric Installations on Shipboard." All definitions used in this section are the definitions of that document.

The electrical generating system must be configured as an integrated propulsion and ship service system, with the following control and segregation capabilities:

a. Operation of any number of generators connected in parallel to the integrated propulsion and ship service bus
b. Separate generator(s) dedicated to ship service electric loads and to propulsion plant loads. Propulsion plant loads in this case include the bow thruster.
c. Segregation of the bow thruster and a generator from all other loads

Manual and operator-initiated automatic synchronizing devices must be provided to allow reconfiguration of the above segregated bus configurations to the integrated bus.

The AC power source and distribution system current carrying conductors and current carrying parts must be ungrounded.

Ship service power systems must have the nominal voltage and frequency ratings listed in Table 300-1, as appropriate for size and service. The ship service and emergency power system characteristics must be in accordance with paragraph 4.5 and Table 4-1 of IEEE Std 45.

The power output characteristics of UPS units and power conditioning devices supplying the Scientific Power System must be as follows:

Voltage regulation	+/- 2% for balanced load
	+/- 3% for 20% unbalanced load
Voltage transient	+/- 5% for loss or return of ac input power
	+/- 8% for 50% load step
	+/- 10% for bypass or return from bypass
Transient recovery time	Return to steady state-conditions within 100 ms after a disturbance
Voltage Harmonic content	4% total, 3% any single harmonic
Frequency regulation	+/- 0.1 Hz
Frequency slew rate	Maximum 1 Hz/s

The ship service electric plant design must be directed by the propulsion plant SSV, and must include equipment such as control consoles, motor drive converter units, transformers, motors, switchboards, and generators.

Where transformers are provided, they must be electrostatically shielded, except when such transformers are provided as an integral part of a commercially available item.

An electric power load analysis (EPLA) must be prepared and updated as detail design and equipment selection progresses. All operating conditions identified herein must be maintained. In the event the contractor identifies additional operating conditions which drive equipment selection or plant configuration, such conditions must be added to the EPLA.

Figure 300-1. Elementary Electric One-Line Diagram

[NECP 001]

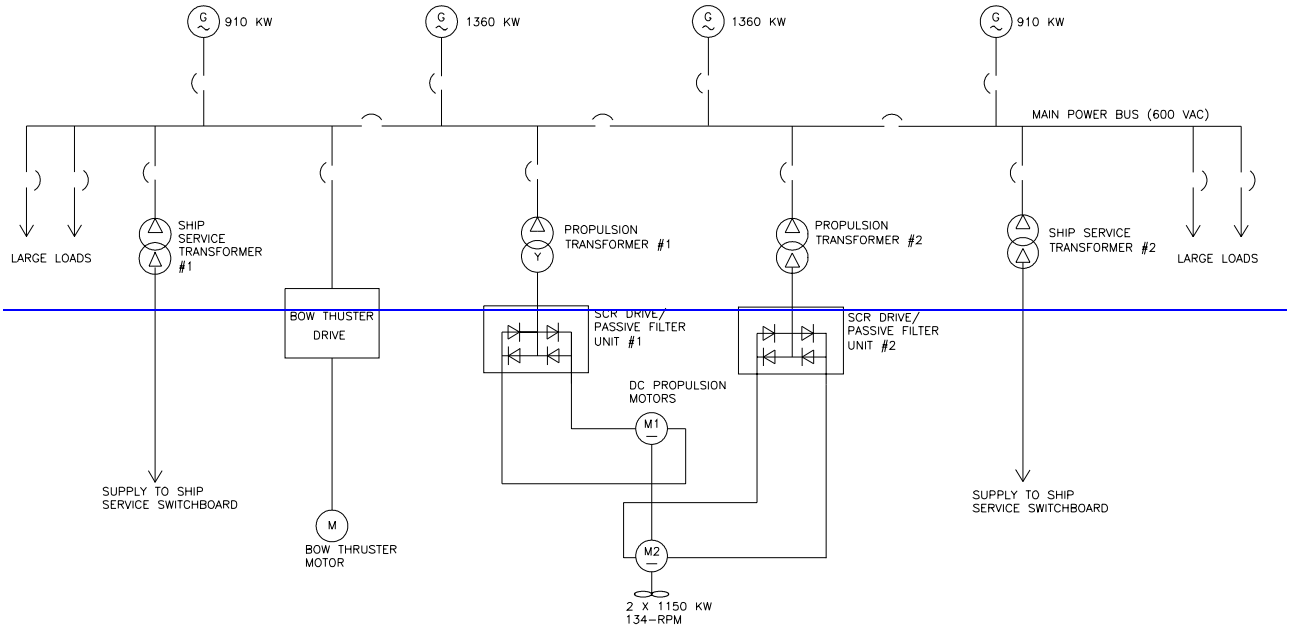

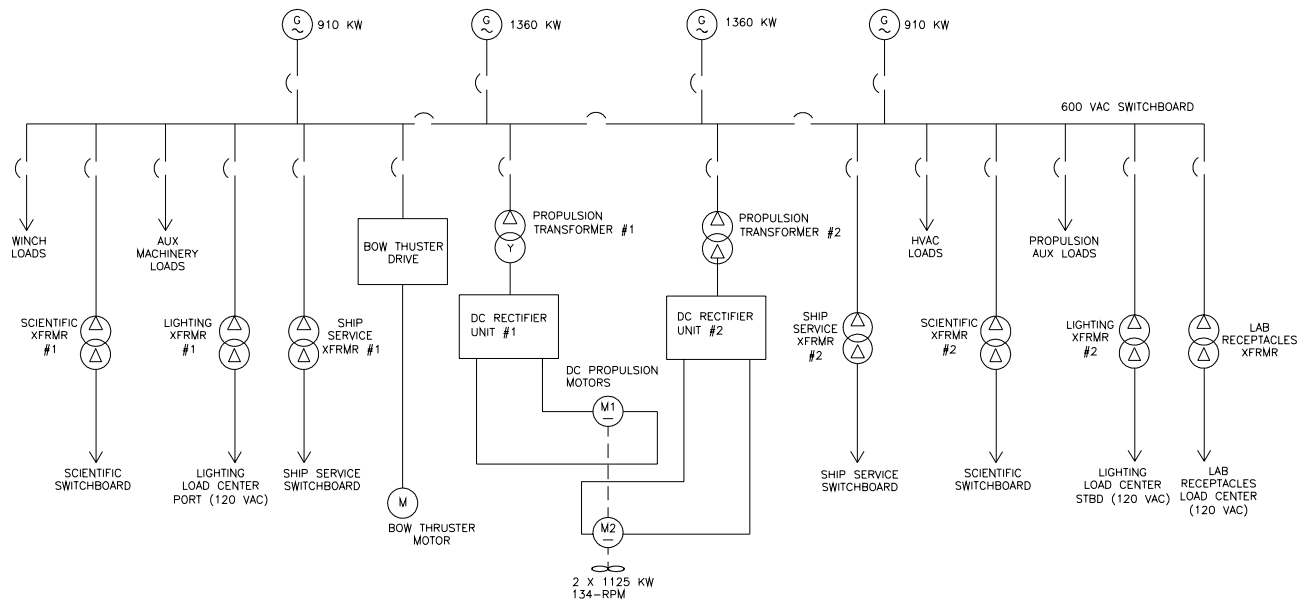

[NECP 001]

Table 300-1. Nominal Ratings

Power Characteristics	AC	DC
Voltage	600 volts 480 volts 240 volts 120 volts	750 volts 24 volts
Frequency	60 Hertz	

300b. Installation Practices

Multi-cable compression-type penetrators must be provided at each watertight and weathertight bulkhead or deck penetration. Bulkhead penetrations for ship service electric power cabling must include 30% spare cable penetrations. Bulkhead penetrations for Mission/Scientific electric and electronic cable runs must each have 50% spares.

Power cables must be marked at each end, at 3000 mm intervals along each cable, and at both sides of bulkheads.

300c. Technical Documentation

Electric Power Load Analysis (EPLA). - An EPLA must be prepared and must tabulate the data required by the Regulatory Bodies and the electrical operating load requirements for each ship operating condition. The EPLA must be updated periodically throughout the design and construction phase. Operating conditions to be assessed for both summer and winter conditions are:

a. 13.5 knot transit
b. bottom trawl (160kN tow at 4 kt in 4 m seas and 35 knot winds, worst combination of wind, waves, current and heading)
c. in-port
d. stationkeeping
e. MOCNESS tow (17.8 kN tow at 1.5 kt in 4 m seas and 35 knot winds, worst combination of wind, waves, current and heading)
f. emergency

Electrical loads must be assigned at the three-digit WBS level and grouped in categories as follows:

200	Propulsion
300	Electrical
400	Electronics and Navigation
500	Auxiliary Systems
600	Outfit and Furnishings

The Electric Power Load Analysis must show operating loads under the required ship operating conditions, tabulated and summarized in such a way as to demonstrate adequacy of the ship's generators and/or solid state frequency changers. The Electric Power Load Analysis must contain data for the development of a power system with adequate generating capacity and solid state power conditioner capacity for the loads shown. The analysis data must be maintained current as previously recorded loads change.

302 ELECTRIC MOTORS AND ASSOCIATED EQUIPMENT

Motors rated above 3 kW, not incorporated in an existing vendor-supplied module or system, with the exception of the propulsion and thruster motors, must be obtained from a single manufacturer. Motor controllers, except for propulsion motor and thruster drives, must be obtained from a single manufacturer.

Autotransformer reduced voltage starters must be used where excessive motor starting voltage dip can be anticipated at the ship service switchboard with a single generator supplying power to the electrical system. The maximum voltage dip must not exceed the values in IEEE-Std-45, Clause 18.1.2. Motors with aluminum frames may not be used.

Motors driving equipment must have the performance and environmental features required by that equipment.

Motors equipped with anti-friction bearings must be provided with tapped holes for lubrication which must be closed with screw plugs. Alternatively, sealed bearing motors may be provided.

Solid-state passive insulation monitors must be installed for generators and motors for propulsion, steering, hydraulic power, seawater and fresh water services, and those motors in the

weather subject to moisture condensation. The monitors must alarm locally and at the EOS for a low insulation condition.

310 ELECTRIC GENERATING EQUIPMENT

The electrical generating system must be in accordance with IEEE Std 45.

The electrical generating system must include a service life electrical growth of 20 percent margin for electric loads, except for propulsion, bow thruster and steering gear loads, at ship delivery. The capability to balance the electrical load between individual generators must be provided. The generators must be capable of supplying the maximum operating load determined by the EPLA with one of the larger generator sets off-line.

When the ship is on shore power, means must be provided to prevent inadvertent paralleling of ship's generators with shore power upon loss of shore power. Scientific power systems may not be interrupted during transfer to or from shore power.

312 EMERGENCY DIESEL GENERATOR

An emergency diesel generator must be provided in accordance with regulatory body requirements.

313 STORAGE BATTERIES AND CHARGING EQUIPMENT

Batteries must be of the sealed, maintenance-free, lead acid or gel cell type. A dedicated set of batteries must be provided for emergency diesel generator electric starting. Except in UPS applications, lead acid batteries may not be connected in parallel.

Battery charging equipment must be provided.

314 POWER CONVERSION EQUIPMENT

314a. Propulsion and Bow Thruster Variable Speed Drives

Propulsion drives must be either air-cooled and located in air conditioned spaces, or they must be water cooled. Propulsion drives must be in accordance with Sections 073 and 235.

Bow thruster drives must support the bow thruster requirements of Section 568.

314b. DC Power

[ECP 0014]A minimum of two rectifier power supplies must be provided to supply 12 and 24 volt DC loads and battery charging requirements under normal operating conditions[ECP 0014]. Each unit must be capable of carrying the total DC load, including battery charging. The units must be provided with ground detection lights, float/equalize toggle switch and rheostat adjustments, and a DC voltmeter and ammeter. The output ripple must be filtered to one percent or less of the rated output voltage.

314c. Ship Service Power

[NECP 001]Transformers must be provided to supply 120 volts to normal lighting circuits and to equipment which cannot be operated from the ship service primary voltage and except as identified in this SOR. [NECP 001]

320 GENERAL REQUIREMENTS FOR ELECTRIC POWER DISTRIBUTION SYSTEMS

320a. Ship Service Power Systems

A ship service power distribution system must be provided, complete with transformers, panel boards, cabling and receptacles.

General purpose receptacles for portable equipment must be provided in all spaces, including open deck areas, but excluding hazardous areas and tanks. Each space and each workbench must have at least one unassigned receptacle. [ECP 0014] In addition, ~~T~~the ET Shop, Conference Room, Mess Room, Lounge, Steering Gear area, Emergency Generator Room, Galley, Offices, Radio/Chart Area, ACS and the Bridge must each have at least two unassigned receptacles. Large spaces must have receptacles in numbers and locations adequate to provide complete coverage of the space by portable appliances, tools or lights equipped with cords no longer than ~~6000~~ 2000 mm, except that cords may be 12 m in length on open decks. Receptacles must be of the duplex type except that ~~watertight or~~ explosion proof receptacles may be of the single type. Receptacles in spaces where they may be exposed to mechanical damage must be watertight. All receptacles must be ~~grounded~~installed with a safety ground.

A watertight 480 volt, three-phase ship service power connection must be provided at the ISO van site. This circuit must be rated at 30 A.

~~In addition to the Scientific Power System receptacles, 120 volt ship service receptacles must be provided in each laboratory. System segregation, grouping and positioning in the spaces must be as for the Scientific Power System installation in the laboratories. Hardwired NEMA 5-15R outlet strips must be installed adjacent to each Scientific Power outlet strip, and~~ Ship service power system receptacles must be color-coded white [ECP 0014].

320b. Scientific Power System

[ECP 0014] A 120 and 240 volt, three-wire ~~ungrounded~~, ~~uninterruptible~~ single point neutral Scientific Power System must be provided for mission electronics and mission electrical services, as described in this section and the individual equipment subsections. ~~Two~~ A dedicated electrostatically shielded isolation transformer~~s~~ must be provided for the Scientific Power System. ~~Each~~ The transformer must be capable of supplying input power to the scientific uninterruptible power system plus 75 kVA of additional loads ~~full load power requirements plus 20% load growth~~ at no more than 90% of rated capacity.

~~An uninterruptible power supply must also be provided for the Scientific Power System, with 60 minute capacity. Uninterruptible power supplies must be located in air conditioned spaces.~~

Services must be grouped according to their use and fed from individual transformers. 120 volt transformers must be supplied for each of the following laboratory and electronics groupings:

a. Bridge, Marine Mammal Observation Data Station~~Navigation equipment providing input to scientific instrumentation~~, and the intercom system.
b. Computer Laboratory, Acoustic Laboratory~~, Conference Room~~.
c. Chemistry Laboratory, Dry Laboratory, Autosalinometer Room, ET Shop.
d. Fish Laboratory, Wet Laboratory, Controlled Environment Room, Hydrographic Laboratory.
e. Van Site.

f. ~~All~~ Conference Room and each stateroom~~s~~ (one ~~NEMA 5-15R outlet~~duplex receptacle per ~~berth~~stateroom), segregated as appropriate.

~~A 240 volt transformer must provide power to 240 volt equipment in the Computer Laboratory and Acoustic Laboratory, with one spare circuit provided to each of those laboratories.~~

Panelboards must be provided for each group and fed from an isolation transformer and must have 50% spare capacity for additional circuits and panel feeder size).

120 volt, single-phase hardwired outlets ~~strips~~ must be provided in the laboratories, Bridge and ET Shop. Except in the Bridge, Fish Laboratory, Wet Laboratory and Hydrographic Laboratory, ~~O~~one outlet strip, fed by a 15 amp circuit breaker must be provided for every ~~2500~~ 3000 linear millimeters of bulkhead and must be installed at a height of about 1200 mm above the finished deck. Each strip must have six standard NEMA 5-15R outlets which will accept standard NEMA 5-15P plugs. Strips must also be provided in the overhead of each laboratory, spaced longitudinally no more than ~~2500~~ 3000 mm apart.

Outlets in the Fish Laboratory, Wet Laboratory and Hydrographic Laboratory must be duplex, with watertight covers, fed by a 15 amp circuit breaker, must be provided for every 3000 linear millimeters of bulkhead and must be installed at a height of about 1200 mm above the finished deck. Watertight duplex outlets must also be provided in the overhead of the Fish Laboratory and Wet Laboratory, spaced longitudinally no more than 3000 mm apart.

Two duplex receptacles must be provided in each electronic equipment rack. Each pair of receptacles must be fed by a 15 amp circuit breaker.

Four unassigned duplex receptacles must be provided on the Bridge and fed by a 15 amp circuit breaker.

A watertight duplex receptacle must be provided at the Marine Mammal Observation Data Station and fed by a 15 amp circuit breaker.[ECP 0014]

Scientific power outlets must be labeled and color coded orange.

[ECP 0014]320c. Scientific Uninterruptible Power System

An uninterruptible power system such as Best Products FERRUPS SEACOTS UPCS Model FE18kVA with Model 23fe battery backup and Make-Before-Break maintenance bypass switch must be provided for selected laboratory equipment and receptacles. The ground for the Scientific Uninterruptible Power System (UPS) must be at the same potential as the ground for the Scientific Power System isolation transformer. Uninterruptible power supplies must be located in air conditioned spaces with exhaust ventilation located over the power supply.

Uninterruptible power outlets must be labeled and uniquely color coded.

The following equipment must be provided with uninterruptible power:

a. Inertial Reference Systems
b. Scientific DGPS System
c. Master Clock System
d. Closed Circuit TV System
e. Scientific Sounder System

f. Acoustic Doppler Current Profiler
g. Multibeam Echo Sounder
h. Passive Sonar
i. Expendable Bathythermograph
j. Water Column Profiler
k. Bongo Net Profiler
l. Autosalinometer
m. Scientific Seawater System (excluding pump)
n. Scientific Meteorological Equipment
o. Sea Surface Temperature System
p. Scientific Computer System
q. Continuous Underway Fish Egg Sampler (excluding pump)
r. Hydrographic Winch Monitoring System (quantity two)
s. Oceanographic Winch Monitoring System
t. Drop Target Strength Winch Monitoring System

240 volt uninterruptible power must be provided to 240 volt equipment in the Computer Laboratory and Acoustic Laboratory, with one spare circuit provided to each of those laboratories.

120 volt, single-phase hardwired outlets must be provided in the laboratories and ET Shop. Except in the Fish Laboratory, Wet Laboratory and Hydrographic Laboratory, one outlet strip, fed by a 15 amp circuit breaker must be provided for every 3000 linear millimeters of bulkhead and must be installed at a height of about 1200 mm above the finished deck. Each strip must have six standard NEMA 5-15R outlets which will accept standard NEMA 5-15P plugs. Strips must also be provided in the overhead of each laboratory, spaced longitudinally no more than 3000 mm apart.

Outlets in the Fish Laboratory, Wet Laboratory and Hydrographic Laboratory must be duplex, with watertight covers, fed by a 15 amp circuit breaker, must be provided for every 3000 linear millimeters of bulkhead and must be installed at a height of about 1200 mm above the finished deck. Watertight duplex outlets must also be provided in the overhead of the Fish Laboratory and Wet Laboratory, spaced longitudinally no more than 3000 mm apart.

One top-to-bottom outlet strip must be provided in the rear of each electronic equipment rack, provided with standard NEMA 5-15R outlets at approximately 150 mm intervals. Each outlet strip must be fed by a 15 amp circuit breaker.

In addition, a 4.3 kVA uninterruptible power system such as Best Products FERRUPS SEACOTS UPCS Model FE4.3kVA with Model RSP-5re-901 battery backup and Make-Before-Break maintenance bypass switch must be provided to serve equipment and outlets on the Bridge, as follows:

a. Electronic Charting System
b. Closed Circuit TV System

c. Acoustic Net Mensuration System

d. Net Sonde System

e. Fish Finding System

f. INMARSAT B Terminal (non-GMDSS)

g. Satellite Communications System

h. Scientific Computer System (four terminals)

i. Duplex receptacles (quantity eight)

j. Flying Bridge marine mammal observation station (watertight duplex receptacle) [ECP 0014]

320~~e~~d. Shore Power

Dead front interlocked receptacles must be provided for shore power in number as determined by the maximum load determined from the in-port load condition shown in the EPLA plus a 20 percent growth margin. Receptacles must be watertight, and must be located on the 01 Level to permit access from each side of the ship. Each receptacle must be rated 480 volts, three-phase, 400 amps, maximum. A control switch and a white pilot light to indicate circuit energized and labeled POWER ON must be included.

Shore power circuit breakers must be of the current limiting molded case-type.

A watertight phase sequence and rotation detector panel must be provided at the shore power station. Shore power emergency disconnect pushbuttons must be provided at the shore power station and in the EOS. These pushbuttons must trip the shore power circuit breakers.

[NECP 001] [ECP 0014]Two, 30 m shore power cables with appropriate terminations must be provided, with a removable stowage locker and cable reels, ~~adjacent~~ at a location convenient to the shore power station [ECP 0014]. [NECP 001] A mating plug with a 3000 mm length of THOF-500 cable pigtail lugged at the free end must be provided for each shore power cable.

324 SWITCHBOARDS AND PANELS FOR ELECTRIC POWER AND LIGHTING

Spare circuit breakers of 10 percent of the type used for active feeder circuits, but not less than one for each active frame size, must be provided on the switchboards and panels. Spares are not required for 400 amp frame sizes or larger. Blank panel locations must be provided for 10 percent of each circuit breaker size on each switchboard and panel.

330 REQUIREMENTS FOR LIGHTING SYSTEMS

The ship must be lighted throughout with fluorescent fixtures in accordance with the IES Publication No. RP-12 and as required herein.

In crew living and working spaces, general illumination intensity may not vary more than 3-to-1 within the area boundaries.

A photometric survey must be conducted. Illumination readings during the photometric survey (when lighting fixtures, lamps and painted surfaces are new) must be multiplied by a maintenance factor of 0.7.

Fluorescent lighting fixtures in spaces containing apparatus that is susceptible to electromagnetic interference, such as the laboratories, ET Shop, Radio/Chart Area and Bridge, must be installed to avoid electromagnetic interference.

Permanent white lighting fixtures must be installed on weather decks, mounted to permit 2000 mm minimum clear headroom and ready safe passage of personnel. Obstructions on the weather deck such as winches, capstans, low or narrow passageways, abrupt changes in deck level, or walkways having sharp bends or corners, must have a fixture located to permit visibility from both sides of the obstruction.

Exterior lighting fixtures and receptacles installed in the weather must have the fixture box and wiring in the interior of the ship whenever possible.

Switching devices for lighting in spaces such as storerooms, lockers, or hazardous spaces, must be provided outside the space near the access. Switching devices for other spaces must be located inside the space, near the access where they will not be obstructed by door swing.

Table lamps must be permanently wired to the ship's lighting system using a three-conductor cable, with the third conductor connected to ground.

332 SPECIAL ILLUMINATION

Laboratory, ET Shop and Radio/Chart Area Lighting. - Laboratories, Conference Room, the ET Shop and the Radio/Chart Area must have a minimum lighting level of 535 lux. In laboratory and work spaces containing more than one lighting circuit, failure of an individual circuit may not cause complete loss of illumination of a continuous work area.

Bridge/Navigation Station. - The Bridge and all navigation stations must be equipped with red illumination in addition to the standard fluorescent fixtures for use at night. A switch must be installed on the door from the 02 Level to the Bridge such that when the door is opened, white light on the 02 Level in the vicinity of the door is extinguished and red lighting is illuminated.

Hoisted Load Illumination. - Fixed, watertight spotlights must be provided on the outboard end of each crane and the A-frame to illuminate the hoisted load. Three watertight spotlights must be provided on the top of the gantry.

Exterior Lighting. - Watertight floodlights must be provided on the weather deck for the deck machinery, operation of cranes, loading and unloading, catch handling and sorting, mission equipment handling, line handling, and anchor handling areas.

Adjustable marine quartz/halogen floodlights must be provided and permanently mounted to illuminate deck machinery and mission equipment, loading and unloading operations, line and anchor handling areas, Side Sampling Station, trawlway, and fish holding bin. Illumination in these areas must be 320 lux. All other weather deck areas must be to a lighting level of 110 lux. In addition, the following floodlights must be provided:

a. Four floodlights such as **Phoenix MS-500-QH**, one forward and one aft on each side of the ship, positioned to provide over-the-side illumination of the retrieval of equipment deployed at the Side Sampling Station and Aft Working Deck.

b. Two floodlights such as **Phoenix MS-500-QH**, positioned, one each, aft at the port and starboard gallows to illuminate the trawl warp lead.

c. Four wide beam floodlights (crab lights) such as **Phoenix MS-1500-QH**, positioned forward on the ship to illuminate a 180 degree range forward of the ship.

Visibility of hoisted loads and the water around such loads, and interference with ship's navigational visibility must be considered during placement of exterior and hoisted load illumination lighting. Placement of all exterior and hoisted load illumination lighting must be approved by the ConRep.

Four portable weather deck floodlights must be provided for localized illumination and shadow elimination. These floodlights must be equipped with mounting clamps, 3000 mm power cords and watertight plugs.

Permanently installed exterior floodlights must be individually controlled by switches located in the Bridge.

333 DEICING SYSTEM

[NECP 001]~~Space and weight for a~~An exterior deicing system must be provided. [NECP 001] [ECP 0035]The deicing system ~~will~~ must cover all exterior vertical bulkheads of the deckhouse on the port and starboard sides, the front of the deckhouse and the stack. The deicing system must cover the horizontal deck on the 02 level forward of the bridge and roll tank. ~~side, the front of the deckhouse and the deckhouse on the starboard~~ [PA28]~~side forward of midships, totaling an estimated 216 m^2~~.[ECP 0035]

[NECP 001]The system ~~will~~ must use electric resistance heating pads similar to Step-Heat Model U2. ~~The system total power requirement will be approximately 21.6 kW.~~ System weight is estimated at 4.2 kg/m^2. The resistance heating pads ~~will~~ must be attached to the ~~exterior~~ interior of the bulkheads by a system of pins and washers.

The system ~~will~~ must be segregated such that all forward facing bulkheads, all port side bulkheads and all starboard side bulkheads can be deiced separately. [NECP 001]

==========

400 ELECTRONIC GROUP

403 GENERAL REQUIREMENTS FOR NAVIGATION, COMMUNICATIONS AND MISSION ELECTRONICS

403a. General

Bridge control and display systems must be ergonomically consistent, and controls and displays which are used to accomplish the same task must be operated consistently and displayed identically. All illuminated devices on the Bridge, including video displays, must have dimming controls or night vision colors to prevent loss of night vision.

Controls and displays must be arranged by function so that the ship controls and navigational equipment are organizationally separated on the console from mission controls, displays and instruments. Selection of location for the various units and arrangement of controls and displays on the consoles must be based on visibility, frequency of use, ease of operation and other aspects of human engineering. Control equipment and displays must have the same look and feel at each control station. The use of overhead mounting above the consoles is desirable for equipment such as radios, and for equipment with displays that are required to be visible throughout the Bridge. Recessing of equipment in the overhead is permissible for local displays.

The port and starboard control stations must be provided with forward-facing ship control consoles fitted with propulsion, bow thruster and ship steering controls.

In addition to controls and indicators required by Section 202, rudder angle indicators must be provided in the Bridge, viewable from the SCC, port and starboard bridge control stations and the ACS.

Electronic equipment cables must be marked at each end, at 3000 mm intervals along each cable, and at both sides of bulkheads.

403b. Trawling System SSV

Single System Vendor. - The Contractor must select a Single System Vendor (SSV) who is responsible for the overall engineering design, integration, testing and supply of the trawling system including, but not limited to:

a. Trawl winches, net sonde winch, Gilson winches, associated hydraulic power system
b. Trawl controls, including Trawl Winch Control System and integration with the Integrated Bridge System
c. Acoustic Net Mensuration System, Net Sonde System and Fish Finding System
d. Integration of GPS, Inertial Reference System, Acoustic Doppler Current Profiler, Speed Log and Gyrocompass System with a., b., and c. above

The SSV must be experienced in commercial and research fishing system development and integration and must have experience as a supplier of equipment for this type of application. The Contractor is prohibited from acting as the SSV.

The Government must be notified and invited to witness factory acceptance testing of all equipment and systems for which the SSV is responsible. Test procedures and reports for all factory acceptance tests must be prepared.

The SSV must provide a "ship rider" during the guarantee period following ship delivery, to assist the crew with troubleshooting, calibration, adjustment and repair of SSV-supplied equipment. A total of 30 days of riding engineering services must be provided over a maximum of eight trips at the request of the ConRep, and may be scheduled at different times throughout the guarantee period. The Contractor must document field changes and modifications made during the guarantee period. Technical manuals, drawings and other documentation must be updated to reflect all such modifications.

403c. High Voltage Hazards

High voltage warning signs in accordance with IEEE Std. 45 must be installed in spaces where personnel could come in contact with exposed energized equipment.

404 RADIO FREQUENCY TRANSMISSION LINES

404a. Radio Frequency Transmission Lines

Coaxial Cable. - After cutting cables to installation lengths, cable ends must be sealed until final connections are made. End sealing may be omitted when the interval between cutting a length of cable and attachment of fittings is 48 hours or less, and exposed ends are not subject to moisture or rapid temperature changes.

Coaxial cables must be installed to permit equipment servicing, equipment deflection, deflection of bulkheads and so that maximum movement of expansion joints and acoustic isolation connections will not subject the cable to tension or shear damage. Sag between hangers must be limited to that allowed for electric cable in similar runs.

Coaxial cable must be supported on beams or hangers and may not be secured directly to shell plating.

Coaxial cables that have not been installed within 18 months of the date of manufacture must be tested for attenuation prior to installation, and must meet dielectric strength requirements.

405 ANTENNAS

405a. Antenna Installation

Remotely controlled units used in antenna circuits, such as tuners, must be located to provide the shortest practical length of transmission line between the antenna and the remote unit. Antenna couplers must be readily accessible and protected from the weather and from contact by personnel.

Coating material may not be applied to any portion of insulation material forming a part of an antenna installation.

HF transmitting and HF receiving antennas must be located to have the maximum possible horizontal separation, and to prevent being shielded by large solid areas of ship structure. HF antennas must be supported by non-metallic guys, as necessary.

VHF omnidirectional antennas must be located to have the maximum possible vertical separation.

Navigational radar antennas must have unobstructed coverage forward and as far as possible to port and starboard.

GPS/DGPS antennas and INMARSAT antennas must be located as high as possible on the superstructure, and be unobstructed.

A mast-mounted omnidirectional TV antenna, such as **Shakespeare Model 2030G**, and a mast-mounted omnidirectional AM/FM antenna, such as **Shakespeare Model 5120** must be provided for the entertainment system.

Two cellular antennas **such as Morad Model 800**, and one VHF antenna such as **AEA Isopole Model ISO-150**must be provided as high on the mast as possible. Cabling from these antennas must be terminated in the Acoustic Laboratory, with sufficient cable to allow the receiver to be located at any point in the space.

Three VHF antennas such as **AEA Isopole Model ISO-150** must be installed on the mast. Cabling from these antennas must be terminated, one each, in the Dry Laboratory, Chemistry Laboratory and Computer Laboratory, with sufficient cable to allow the receiver to be located at any point in the space.

Antenna disable switches must be provided for mechanically rotating antennas. The switch must be located near the antenna, accessible from outside the swing circle to permit personnel to disable the antenna prior to entering the swing circle. The disable switch must also control a red light and a green light, located on or adjacent to the associated equipment control unit, to indicate MAN ALOFT - DO NOT RADIATE when the red light is energized.

420 DYNAMIC POSITIONING SYSTEM (DPS) AND AUTOPILOT

420a. General

A DPS must be provided and must operate in the following modes: manual, autopilot, and automatic control for trackline and stationkeeping operations. DPS primary control must be at the SCC. Secondary controls must be located at the port and starboard bridge control stations and the ACS. Station selection must be located at the SCC. Visual indications and voice communications must be provided at primary and secondary stations to effect and accept control hand-off. Full positive control must be maintained during control transfer.

The DPS control must include an IBM PC-compatible color video display monitor and keyboard embedded in the SCC. A video display monitor must be provided at each secondary control station. The video displays must indicate the following:

a. Commanded and actual ship position and track projected on a grid with axes calibrated in latitude and longitude. Scale of the display must be user-selectable.
b. The DPS mode which is enabled (i.e. manual, autopilot, trackline, etc.).
c. Ship heading.
d. Waypoint locations.
e. Any additional information needed for operation of the DPS in the various modes.

Propulsion, steering, and thruster control devices must be configured to accept commands from the DPS. The DPS must include software for power management and crew training. The

DPS must be capable of operating in any mode with the following combinations of main propulsion system and bow thruster:

a. Bow thruster only.
b. Main propulsion system only.
c. Bow thruster and main propulsion.

420b. Manual Mode

In the manual mode, control must be by dual axis joystick at the SCC, port and starboard bridge control stations and ACS. The joystick must include automatic heading capability. Joystick control response must be squared curve (instead of linear).

420c. Autopilot Mode

An autopilot steering system must be provided, with control at the SCC and at the ACS. The system must be switchable from hand steering to autopilot steering, and have a sensitivity adjustment for heavy weather in the autopilot mode. Station selection must be from the SCC.

The autopilot must automatically control the ship's heading within two degrees of the selected course at speeds from 0.5 knots to maximum. Propeller r/min must be manually controlled by the MCS controls or the DPS joystick.

420d. Automatic Control Mode

The DPS must automatically control main propulsion system, rudder and bow thruster azimuth angles and r/min to meet the performance requirements of Section 070.

During trackline operations, the DPS must provide the capability of accepting at least 40 waypoints. Permissible maximum variation of the ship's heading from the track course (crab angle) must be user-selectable up to a limit of plus or minus 45 degrees. When following a multiple waypoint trackline that requires a change in course after a waypoint, the DPS must change the ship's heading automatically to follow the new course of the next track segment. The DPS must alert the operator that a turn is impending by sounding an alarm at a fixed time interval before the turn. The DPS must require an acknowledgment of the alarm before the turn is executed. The DPS must alert the operator by sounding an alarm when the ship falls off track.

In the automatic mode, the DPS must be capable of using position information from the following sources:

a. The ship's global positioning system (GPS and DGPS)
b. Trawl net position information systems
c. Two spare input ports (reserved for future use)

421 NON-ELECTRICAL AND NON-ELECTRONIC NAVIGATION AIDS

Pelorus stands for gyro repeaters must be provided port and starboard forward of the Bridge, aft of the Bridge on the starboard side and at each Marine Mammal Observation Station.

Each pelorus stand at the Marine Mammal Observation Stations must be located to permit taking bearings through an arc of at least 200 degrees, from 10 degrees across the bow to 10 degrees across the stern. Metal repeater covers must be provided for each stand.

A barometer must be provided in the Radio/Chart Area.

Trim and heel clinometers must be installed in the Bridge and the EOS.

A magnetic compass in accordance with ISO 449, "Shipbuilding - Magnetic Compasses and Binnacles, Class A" must be installed on the centerline on the top of the Bridge. A steering reflector must be installed in the Bridge, configured to permit reading headings from the SCC. The pedestal and hood must be made of heavy gauge aluminum treated with hard coating. The topside compass hood must be provided with a removable canvas cover. The topside pedestal base must be provided with a mast boot.

422 NAVIGATION LIGHTS, SIGNAL LIGHTS AND SEARCHLIGHTS

[NECP 001]Navigation lights, including lights for ~~towing,~~ fishing, trawling and restricted maneuverability, must be provided to comply with 72 COLREGS and as specified herein. [NECP 001] Fixtures must be certified in accordance with UL 1104.

The masthead lights and restricted maneuverability lights must be fitted with screens attached to the base of the fixtures to ensure that direct or reflected light will not fall into the eyes of lookouts.

Aircraft warning lights, red, covering 360 degrees, must be installed on top of the main mast.

Navigation and signal lights must be monitored from the navigation light indicator panel.

Two 380 mm, 1000 watt, remote operating searchlights such as **Phoenix Model MSL-15/120** must be provided on top of the Bridge, one each on the starboard and port side. Searchlight control must be from the Bridge.

Access for maintenance of the lights must be provided.

423 ELECTRICAL AND ELECTRONIC NAVIGATION SYSTEMS

423a. Global Positioning Systems

Two differential C/A code 12 channel GPS (DGPS) receivers, **Leica Geosystems, Inc. Model MX412B**, or equal[PA29], must be provided. One installed unit must be located at the SCC and must provide position information for ship's navigation systems and DPS. In addition to the primary display at the SCC, remote displays must be provided at the ACS and Radio/Chart Area.

The second installed DGPS unit must be located in the Computer Laboratory and must provide position information for scientific mission systems and equipment. The scientific GPS receiver must also provide position input to the SCS.

One spare antenna must also be installed, with interconnecting cabling led to the installed scientific DGPS receiver. A third DGPS receiver and antenna combination of the same make and model must be provided onboard as spares.

GPS installations must be such that Government-provided P-Code receivers can be installed on a mission basis.

[ECP 0014] Power for the scientific GPS system must be provided from the Scientific Uninterruptible Power System.[ECP 0014]

423b. Inertial Reference System

One inertial reference system, **TSS, Inc. Model POS/MV320**, or equal, must be provided. The inertial reference system must be the primary heading and position input for scientific instrumentation systems. The control unit and primary display must be in the Computer Laboratory, with remote displays at the SCC and Acoustic Laboratory. The Inertial Measurement Unit must be located in the IMU Room. The system must provide position, velocity, heading, heave, roll and pitch output, as appropriate, to the scientific sounder, ADCP, net mensuration system, net sonde system, multibeam imaging sonar, trawl winch control system, INMARSAT, and the radar systems. All system outputs must be provided to the SCS.

Space and weight must be provided for a second inertial reference system.

[ECP 0014] Power for the inertial reference system must be provided from the Scientific Uninterruptible Power System.[ECP 0014]

423c. Ship's Depth Finding

A depth finding system must be provided in accordance with regulatory requirements. The system must be a digital fathometer with digital readouts located at the SCC, the port and starboard Bridge Wing stations and the ACS.

423d. Speed Log

A dual axis Doppler speed log system, **Sperry Marine, Inc. Model SRD 500,** or equal, must be provided. System control and display must be located at the SCC. The transducer assembly must be located in the Transducer Room, and must include a gate valve for transducer removal. The system must provide data to the Surface Search Radars and to remote repeaters at the port and starboard Bridge Control Stations, ACS and Computer Laboratory. The Doppler speed log must also provide input to the SCS.

[ECP 0014]~~Power for the Doppler speed log system must be provided from the Scientific Power System.~~[ECP 0014]

An electromagnetic speed log system, **AGI Model EM2000**, or equal, must also be provided, with control and primary display at the SCC. The sensor must be a blister type, mounted in the Transducer Room. The system must provide data to the Surface Search Radars and to the SCS.

423e. Gyrocompass Systems

A gyrocompass system, **Sperry Marine, Inc. Model Mk 37 VT**, or equal, must be provided. The system must consist of a master compass, control unit and bearing repeaters and rate of turn indicators. A second, identical master compass and control unit must be provided. The two master compasses and control units must be interswitched. The gyrocompass system must provide heading reference input to the Surface Search Radars, DPS, navigation depth finder and INMARSAT terminals.

The system must include a gyrocompass failure alarm system to give audible and visual indication of gyrocompass failure on the Bridge. The master compass and control unit must be located on the Bridge. Two rate of turn indicators must be provided, one port and one starboard forward in the Bridge. Gyrocompass repeaters must be provided in the following locations:

a. at each pelorus stand. These must be gimbaled analog repeaters.

b. the SCC. This must be an open scale type.
c. the port and starboard Bridge Control Stations. These must be digital repeaters.
d. the ACS. This must be a digital repeater.
e. the Commanding Officer's Stateroom. This must be a digital repeater.
f. the Steering Gear Room. This must be a digital repeater.
g. the Computer Laboratory. This must be a digital repeater, with digital input to the SCS.

423f. Surface Search Radar

The Contractor must provide a matched pair of radars as part of the Integrated Bridge System. The radar system must comply with IMO Res. A.477(XII), Performance Standard for Navigation Radar Equipment and IMO Res. A.422(XI), Performance Standards for Automatic Radar Plotting Aids. The system must consist of one X-Band ARPA radar with 25 kW X-Band transceiver (bulkhead mount) and 1.8 meter antenna plus one S-Band ARPA radar with 30 kW S-Band transceiver (bulkhead mount) and 3.7 meter antenna. Display and control must be located on the Bridge, with separate 340 mm color display consoles for each radar. An interswitching subsystem must be installed between the two radars.

423g. Ship's Whistle

A ship's whistle must be provided in accordance with regulatory requirements. Means for automatically sounding the ship's whistle at adjustable intervals must be provided on the Bridge.

423h. Master Clock System

A master clock system, **Datum, Inc. Model Tymserve 2100-GPS Network Time Server**, or equal, must be provided[PA30], with time code translator generator with RS 232 REQ option, IRIG B, and on request computer data output capability. The master clock must have a local readout display and means of manually setting and adjusting date and time. The master clock must be rack mounted in the Computer Laboratory. A battery backup capability must be provided. The Master Clock system must provide data output to the SCS and must include remote indications in the Bridge, Radio/Chart Area, ET Shop and all laboratories. [ECP 0014] Power for the master clock system must be from the Scientific Uninterruptible Power System.[ECP 0014]

432 INTERIOR COMMUNICATIONS SYSTEMS

432a. Sound-Powered Telephone System

The sound powered telephone system must include communication between the Bridge, Damage Control Lockers, EOS, Steering Gear Room, Bow Thruster Room, single man staterooms, Radio/Chart Area, bow and the Emergency Generator Room.

A fueling sound powered telephone circuit must be provided. This circuit must consist of a single system connecting machinery spaces near fuel manifolds, EOS, fueling stations, tank sounding tubes outside the main machinery spaces and the Bridge. The fueling sound powered telephone circuit must be provided with headsets.

432b. Dial Telephone System

A digital dial telephone system, **InterTelCom Comdial Model DXP PLUS**, or equal, must be provided. The system must provide for operator free dialing and communication for both incoming and outgoing calls between the outside lines, INMARSAT B terminals, satellite communication system terminal, cellular phone, SEAPHONE and the station connections identified herein. Permanently installed stations in the weather must be watertight and have an external bell. Telephone handsets must have positive restraining devices. The Contractor must program the system and provide a telephone directory placard and operating instructions for each station.

Shore Telephone Connection. - A six-line shore telephone connection box must be provided. This box must be a NEMA 4X stainless steel enclosure, located so that it may be served from either side of the ship. Two lines from the shore connection must be routed to the SCS through a patch panel located next to the telephone switch, as required by Section 493. Four lines from the shore telephone connection must be routed to the telephone switch via the patch panel. A 12 conductor, 18 AWG marine telephone cable, 50 m in length, must be supplied with provision to store the cable in the connection box when not in use.

INMARSAT Connections. - The INMARSAT B and satellite communication systems must be connected to the telephone switch via the patch panel to provide operator free dialing and communication via voice, data, and FAX for both incoming and outgoing calls.

Cellular Connection. - The cellular phone system compatible with AT&T PCS service must be connected to the telephone switch via the patch panel to provide operator free dialing and communication via voice, data, and FAX for both incoming and outgoing calls.

Public Address Connection. - The Public Address system must be connected to the telephone switch to provide the capability of making announcements from any phone station.

RS-232 Connection. - An RS-232 data line must be routed from the telephone switch to the ET Shop for system programming.

AM/FM/SW Receiver Connection. - An AM/FM/SW receiver with digital frequency display must be provided and connected to the telephone switch and the AM/FM/SW/TV distribution system.

Logging Capability. - The telephone switch must have the capability to provide a hard copy output of all system activity.

SEAPHONE Connection. - An INMARSAT SEAPHONE must be provided and connected to the INMARSAT B system to permit operator-free dialing and communication for both incoming and outgoing calls.

FAX Connection. - The plain paper FAX required in Section 441 must be connected to the telephone system to permit operator-free dialing and FAX communication for both incoming and outgoing calls via phone line, cellular, or INMARSAT B. A manual switch must be provided to select between phone line, cellular, or INMARSAT B for FAX communication.

Station Connections. – The Bridge, EOS, Radio/Chart Area, Offices, Lounge, Ready Room, laboratories, Machinery Spaces, Working Deck, Side Sampling Station Control Booth, Galley, Messroom, and staterooms must contain a telephone jack and telephone. A weatherproof telephone connection box must be provided in the vicinity of the van site. All stations must contain a multi-line capability (four outside line, cellular line and INMARSAT B line).

Power Connection. - Power for the telephone system must be from the navigation and ship control power system.

432c. Public Address System

A shipwide public address system must be provided. The system must transmit voice announcements from the Bridge and side sampling station to the following groups of loudspeakers:

Group 1 - Entire Ship

Group 2 - Weather Deck Forward

Group 3 - Weather Deck Aft, Side Sampling Station

Group 4 - Machinery Spaces, including Bow Thruster Room

Group 5 - Living Spaces, Passageways, Messroom, Lounge, Galley

Group 6 - Laboratories, Crew Ready Room, Conference Room, Van Site

The control station on the Bridge must include a control panel and amplifier, portable microphone with sufficient coiled shielded cord to reach any ship control station in the Bridge, and switches for selecting groups of loudspeakers individually or collectively in any combination. The control station and microphone must be mounted in the SCC.

The system must generate and transmit an electronic fog bell signal to the weather deck forward.

A portable microphone/speaker station must be provided at the van site.

Configuration of the loudspeaker installations must prevent a ground, short or open circuit in a loudspeaker from having a disabling effect on the remainder of the system.

Speaker locations, power output, and quantity must be such that announcements can be heard and understood over normal underway ambient noise, including noise on the Aft Working Deck. Machinery space speakers must be provided input from separate amplifiers and must have volume controls.

The public address system must have provisions to accept audio input from the telephone system and to mute the entertainment system during announcements.

432d. Intercom System

An intercom system such as **Hose McCann Telephone Co., or Spar Aerospace** must be provided. The system must interconnect the SCC, ACS, laboratories, Marine Mammal Observation Stations, port and starboard bridge control consoles, local winch and net reel control areas, gallows and Gantry area, the Main Deck area of the Side Sampling Station, Side Sampling Station Control Booth, Van Site, Aft Deck Cranes and forward weather deck. Each interior station must be a master station and each exterior station must be a slave station. Speaker-microphone stations must be provided at each station, and must permit hands free operation. Each master must be capable of selectively communicating with any other station or combination of stations in the system by activation of appropriate selector switches.

Power for the intercom system must be from the Scientific Power System.

432e. Entertainment System

Lounge Entertainment System. – Space and weight must be provided in the Lounge for a stereo system, television, two DVD players and an entertainment storage cabinet. The stereo

system will consist of an AM/SW/FM receiver of at least 35 watts per channel, surround sound, matching speakers, dual drive cassette recorder and CD player. Cabling must be provided to connect the DVD players with the central entertainment system. The television will be a 690 mm color TV receiver. Lockable, configurable storage will be provided for 1000 units of various formats, including 8mm video, VHS, audiocassette, and audio/video CDs and DVDs.

Central Entertainment System. - An AM/FM/SW/TV distribution system, such as **Multiplex Technology Channel Plus,** must be provided to distribute AM/SW, 88 MHz to 108 MHz FM, VHF, UHF, Armed Forces Radio and TV Service (AFRTS), and cable TV signals to staterooms, Lounge, Mess Deck, Ready Room, and all interior laboratories. Input to the system must be from FM/TV antennas, AM/SW antennas, a cable TV connection, and space and weight DVD players. Central distribution must be located in the ET Shop. The distribution system must permit simultaneous distribution of VCR and DVD players' outputs on four UHF channels. The distribution boxes must contain the necessary splitter and balance elements to provide signals to each distribution point, while preventing mutual interference/interdependence. Faceplates on the distribution boxes must be inscribed to indicate the application of each connector. Distribution must be via a single cable. Input for a future directional FM/TV antenna must be provided.

432f. General Alarm System

An independent general alarm system must be provided.

432g. Fire Alarm System

A fire detection and alarm system must be provided. The ship fire alarm system must be compatible with the machinery space fire alarm system. A rotating fire alarm beacon must be provided on the exterior of the ship, located to provide 360-degree visibility.

432h. Closed Circuit Television System

A closed circuit television (CCTV) system must be provided. The system must include a minimum of six cameras that provide coverage of the aft Working Deck, equipment controlled at the ACS, and areas of the Working Deck which are not directly visible from the ACS. Cameras must cover, as a minimum, each trawl winch and the oceanographic winch. The other cameras are to be placed at ConRep direction. Cameras must have remotely controlled pan, tilt, zoom and automatic focus features[PA31]. Cameras must be environmentally protected.

Three video monitors, approximately 230 mm, each with camera selection switch and controls, mounted in an equipment rack, must be provided at the ACS. Additional monitors and selector switches must be provided at the SCC, in the Acoustic Laboratory, Chemistry Laboratory, Dry Laboratory and Chemistry Laboratory.

[ECP 0014] Power for the CCTV system must be from the Scientific Uninterruptible Power System.[ECP 0014]

438 INTEGRATED BRIDGE SYSTEM

An Integrated Bridge System (IBS) such as **Sperry Voyage Management System - Vision Technology, or Kongsberg Norcontrol BridgeLine** must be provided. The IBS must be configured as a SCC with integrated systems in which all navigation digital data sources and ship control commands are interconnected by means of a dual redundant loop data bus. The system must incorporate a Navigation Workstation for voyage planning at the Radio/Chart Area and a Voyage Management System (VMS) with centralized command and display for real time navigation control.

The IBS must have the capability to overlay radar and ARPA target data over the chart display. The IBS must comply with the specification for chart content and display for Electronic Chart Display and Information System (ECDIS), IHO S-52, scheduled to be in effect at ship delivery.

The SCC must include radar displays, voyage management command station, propulsion, bow thruster, and steering control, required regulatory navigation instrumentation and alarm/data display. The ACS and port and starboard bridge wing ship control consoles must include propulsion, bow thruster and steering controls, and summary alarm displays.

The IBS data bus must interconnect all control consoles. It must exchange data and control commands, as required, between the VMS, MCC and Dynamic Positioning System for initiating shaft speed and direction, bow thruster and steering commands during automatic operations. Feedback acknowledgment and display of orders accomplished must be provided.

Means for transferring control between control consoles and systems must be provided as follows:

a. Propulsion control must be capable of being transferred between the MCC and the SCC.

b. Propulsion, bow thruster and steering control must be capable of being transferred between the following secondary control stations or systems:

    1. The SCC and port or starboard bridge control consoles.
    2. The SCC and the VMS.
    3. The SCC and ACS.
    4. The SCC and the ACS or port or starboard bridge control consoles, when using the dynamic positioning system.

The SCC must be capable of overriding ship and propulsion control of all other secondary control stations, DPS, and VMS. The MCC must be capable of overriding propulsion control of all other control stations, DPS and VMS.

The IBS must provide propeller speed and direction of rotation data to the SCS.

441 EXTERIOR COMMUNICATIONS SYSTEMS

An exterior communication system must be provided in accordance with GMDSS Sea Area A4 requirements, implemented with the INMARSAT B equipment option, and with the duplication of equipment maintenance option. In addition to the GMDSS-required equipment, the following equipment must be provided:

a. Three VHF radiotelephones for survival craft, **ACR Model 2727**, or equal. The radios must have Lithium batteries for operation, and must also be provided with Ni-Cad batteries and chargers for testing.

b. [NECP 001]A VHF radiotelephone such as **Motorola Model M43GMC20D2**, capable of transmitting and receiving on NOAA frequencies (164.025 Mhz and 164.075 Mhz)

as well as channels 6, 9, 16, ~~and~~ 13, 22, 68 and 82A, installed on the Bridge. [NECP 001] The radios must have 25 watt output.

c. One plain paper laser printing facsimile machine.

d. One aircraft transceiver, such as **Narco Model 810G**.

e. One 3-watt cellular phone, compatible with AT&T PCS wireless services, with PABX/RJ-11 interface, with an antenna such as **Shakespeare Model 4800**.

f. In addition to GMDSS requirements, one INMARSAT B SES with 56/64 kbaud option, SEAPHONE, AFRTS RED receiver, dual ID and dial telephone system interface. This INMARSAT B system must be of the same make and model as the system supplied for GMDSS purposes.

g. One INMARSAT C SES, **Trimble Model 70001-GALAXY-C/GPS**, or equal, certified as compliant with IMO Resolution A.807(19). This system will be connected to a Government installed Shipboard Environmental Acquisition System (SEAS).

h. One satellite communication system, **Westinghouse Model 1000+ Wavetalk**, or equal.

461 SCIENTIFIC SONAR SYSTEMS

The ship must be designed so that machinery noise and hull and hull appendage flow noise do not cause degradation in the performance of any of the ship's acoustic sensors. Sonar systems must be in accordance with Section 073.

Cable from all scientific sonar transducers must be terminated with 2000 mm of slack at the inboard end, to allow subsequent reterminations.

461a. Scientific Sounder System

A Scientific Sounder System with data logging and hydroacoustic post-processing, **Kongsberg Simrad Model EK 60** or equal, must be provided. The system must be capable of operating at four frequencies simultaneously. The system must consist of four General Purpose Transceivers (GPT), four transducers, echogram color printers, processing unit with large LCD color display, remote LCD color display and control unit, and all required interconnecting hardware and cabling.

The GPTs and transducers must operate at 18 kHz (split beam), 38 kHz (split beam), 120 kHz (split beam) and 200 kHz (split beam).

All transducers except the 18 kHz transducer must be mounted in bottom of the centerboard. The 18 kHz transducer must be mounted in a water-backed sea chest in the Transducer Room, in accordance with the manufacturer's recommendations.

The remote color LCD display and control unit must be provided in the vicinity of the SCC. The GPTs must be located in a dry, accessible space as close as possible to the transducers. The processing unit, color display and control unit and printers must be mounted in the Acoustic Laboratory. The system must have at least 8 GB free disk space and have tape backup hardware and software for the system software and data. The disk system must be Raid 5.

Input from the Inertial Reference System, GPS and gyrocompass must be provided in addition to all required sensor data inputs, and must provide data output to the SCS.

[ECP 0014] Power for the system must be supplied from the Scientific Uninterruptible Power System.[ECP 0014]

461b. Acoustic Doppler Current Profiler

A phased array Acoustic Doppler Current Profiler (ADCP), **RD Instruments Model Ocean Surveyor**, or equal, operating at 75 kHz, must be provided. The system must have speed log capability and remote display of speed at the SCC, and must consist of a transducer assembly, a deck unit, and an acquisition and display system in accordance with manufacturer's recommendations. The ADCP system must be provided with, and configured to accept, inputs from the Inertial Reference System, GPS and gyrocompass. External triggering must be provided and the ADCP connected with the Scientific Sounder System.

Data output from the acquisition and display system must be provided to the SCS.

The transducer assembly must be installed in the bottom of the centerboard. The deck unit and its associated acquisition and display system must be rack mounted in the Computer Laboratory.

[ECP 0014] Power for the ADCP system must be from the Scientific Uninterruptible Power System.[ECP 0014]

461c. Acoustic Net Mensuration System

An acoustic net mensuration system, **Northstar Technical, Inc., Model NetMind**, or equal, must be provided. The system must consist of an integrated deck unit, two 28 kHz transducers, headline height sensor, two trawl door spread sensors, a depth sensor, a temperature sensor, one catch sensor and one battery charger. All underwater sensors must be certified for operation at 1200 fathom water depth. The net mensuration system must provide headline height and depth [PA32]input to the scientific sounder system. The transducer must be located on a sloping face aft on the bottom of the centerboard, mounted as recommended by the manufacturer.

The electronics unit and a display unit must be mounted at the ACS. The electronics unit must be interfaced with all other ship systems necessary to allow proper functioning of the net mensuration system. Available data output must be provided to the SCS.

[ECP 0014] Power for the acoustic net mensuration system must be provided from the Scientific Uninterruptible Power System.[ECP 0014]

461d. Net Sonde System

A net sonde system, **Wesmar Model TCS 700E**, or **Kongsberg Simrad Model FS925**, or equal, must be provided. The system must consist of a display unit, processor unit, power supply, trawl unit, sonar head, sensor unit, and one catch indicator. All underwater sensors must be certified for operation at 1200 fathom water depth.

The display unit and processor unit must be mounted at the SCC. The electronics unit must be interfaced with all other ship systems necessary to allow proper functioning of the net mensuration system. Available data output must be provided to the SCS. The net sonde winch must be in accordance with Section 591.

[ECP 0014] Power for the net sonde system must be provided from the Scientific Uninterruptible Power System.[ECP 0014]

461e. Fish Finding System

A dual frequency high performance color sounder system, **Kongsberg Simrad Model ES 60**, or equal, operating at 50 kHz and 200 kHz, must be provided. The system must provide input to the net mensuration system. Speed log, sea surface temperature and Inertial Reference

System/GPS input must be provided to the Fish Finding System. The system must consist of a display unit located in the Bridge visible from the SCC[PA33] and transducer assembly mounted in the Transducer Room. A remote indicator must be provided in the Computer Laboratory. Data output must be provided to the SCS. [ECP 0053] External triggering must be provided to the ES 60 from the EK 60 Scientific Sounder System.[ECP 0053]

[ECP 0014] Power for the fish finding system must be provided from the Scientific Uninterruptible Power System.[ECP 0014]

461f. Multibeam Echo Sounder

A multibeam echo sounder system, **Kongsberg Simrad Mesotech Model SM 2000**, or equal, with 120 degree swath width, 1.5 degree beam, 90 kHz transmit transducer, and 120 degree receive array[PA34], must be provided. Four wire data telemetry must be provided. The system must have at least 8 GB free disk space and have tape backup hardware and software for the system software and data.

The system processor must be located in the Acoustic Laboratory, with display units located in the Acoustic Laboratory and the Bridge. The transducer must be installed in the Transducer Room.

Ship's position and speed inputs must be provided from the Inertial Reference System, GPS and Gyrocompass systems. Data output must be provided to the SCS.

[ECP 0014] Power for the multibeam imaging sonar system must be provided from the Scientific Uninterruptible Power System.[ECP 0014]

461g. Passive Sonar

A passive sonar transducer, **Airmar Model 41-065-1-01 or International Transducer Corp. Model ITC-5008**, or equal, must be provided in the Transducer Room. It must operate at 12 kHz with a 40-degree beamwidth, and must have a 2 kW output power capability.

Space and weight must be provided for the deck unit in the Dry Laboratory. The deck unit will be similar to Knudsen Model 320B.

Cabling must be provided between the deck unit location and the Computer Laboratory for data input to the SCS.

[ECP 0014] Power for the passive sonar system must be provided from the Scientific Uninterruptible Power System.[ECP 0014]

461h. Acoustic Release Transducer

An acoustic release transducer, **EdgeTech Model 8012A**, or equal, must be provided. The transducer must be potted to provide a flush face. The transducer must be mounted in the centerboard, with the cable routed to the Wet Laboratory. 10 m of cable must be coiled and mounted on the Wet Laboratory bulkhead, with the end of the cable sealed.

493 SCIENTIFIC INSTRUMENTATION

493a. Scientific Wireway

An unused dedicated scientific wireway must be provided which interconnects the Bridge, Radio/Chart Area, base of the Main Mast, ET Shop, Computer Laboratory, Wet Laboratory, Dry Laboratory, Chemistry Laboratory, Hydrographic Laboratory, Acoustic Laboratory, centerboard

trunk and Transducer Room, and provides electrical access to the Working Deck area and the ISO van site. This wireway must be not less than 150 mm deep and 300 mm wide. Within the Main Deck laboratories the scientific wireway must be located near the overhead, passing down the approximate longitudinal midline of each space.

Five cable passing tubes to the weather must be provided, as follows:

a) from the Fish Laboratory to the Aft Working Deck

b) from the Wet Laboratory to the Side Sampling Station

c) from the Chemistry Laboratory to the Side Sampling Station

d) from the Dry Laboratory to the Hydrographic Laboratory

e) from the Hydrographic Laboratory to the Side Sampling Station.

Tubes must be located at the same height as the scientific wireway, and must extend 150 mm inboard and outboard of the respective bulkhead. The tubes must be a minimum of 170 mm standard pipe provided with external pipe caps with keeper chains.

493b. Expendable Bathythermograph

An expendable bathythermograph (XBT) system must be provided. The system must consist of a hand-held launcher such as **Sippican Model LM-3A**, an Oceanographic Data Acquisition System kit such as **Sippican Model MK-12**, and an acquisition and display system in accordance with manufacturer's recommendations.

[ECP 0002D]The acquisition and display system with the Oceanographic Data Acquisition System must be rack mounted in the ~~Hydrographic~~ Dry Laboratory. This system will be interfaced with the Government installed SEAS system.

[ECP 0014] Power for the XBT must be from the Scientific Uninterruptible Power System.[ECP 0014]

A watertight storage box for the hand-held launcher and cabling must be provided forward at the Side Sampling Station. A watertight connector must be installed inside the storage box for connecting the launcher to the XBT junction box in the ~~Hydrographic~~ Dry Laboratory.[ECP 0002D]

493c. Water Column Profiler

Space and weight must be provided for a water column profiler system, consisting of an underwater CTD unit, a carousel sampler and stand, a deck unit and an acquisition and display system

The underwater CTD unit will be similar to a Sea-Bird Electronics, SBE Model 9 plus. The underwater unit will include a sonar altimeter similar to Datasonics PSA-900; a fluorometer similar to Chelsea Instruments Model FASTtracka; a transmissiometer similar to Chelsea Instruments ALPHAtracka Mark II; a dissolved oxygen sensor similar to Sea-Bird Electronics SBE Model 13; a 12 kHz pinger similar to Datasonics Model BFP-312, and a carousel sampler similar to Sea-Bird Electronics Model SBE-32.

The 12 kHz pinger will be powered by rechargeable Ni-Cad batteries. A battery charger compatible with the unit must be provided.

The underwater CTD unit will be mounted inside and under the frame of the carousel sampler. The carousel sampler will be sized for use with twelve Model 1010 Nisken sampling bottles. Stowage for the water column profiler system must be provided at the Side Sampling Station and in the Hydrographic Laboratory.

The CTD deck unit will be similar to Sea-Bird Electronics, SBE Model 11 plus. The CTD deck unit and its associated acquisition and display system will be mounted in the Dry Laboratory. The connection between the acquisition and display system and the CTD deck unit must be an RS-232 serial link. Data output must be provided from the deck unit to the SCS.

The CTD deck unit must be connected to the slip rings on the hydrographic winches by way of a selector switch located in the Dry Laboratory. A connector from the EM conductor cable on the hydrographic winches to the underwater CTD unit will be provided as recommended by the manufacturer.

[ECP 0014] Power for the CTD system must be provided from the Scientific Uninterruptible Power System.[ECP 0014]

493d. Bongo Net Profiler

Space and weight must be provided for a self-contained CTD system similar to Sea-Bird Electronics Model Seacat SBE-19, with Sea-Bird Electronics Model SBE-36 deck unit and underwater power supply. The deck unit will be installed in the Dry Laboratory and must provide data input to the SCS.

[ECP 0014] Power for the Bongo Net Profiler must be provided from the Scientific Uninterruptible Power System.[ECP 0014]

493e. Salinometer

Space and weight for an autosalinometer similar to Guildline Model 8400B must be provided in the Autosalinometer Room. The autosalinometer will be mounted with shock mounts on a counter near the sink.

[ECP 0014] Power for the salinometer must be provided from the Scientific Uninterruptible Power System.[ECP 0014]

493f. Scientific Seawater System

A scientific seawater system consisting of a temperature sensor, thermosalinograph, fluorometer, particle counter and flow meter must be provided. Scientific seawater system piping and installation must be in accordance with Section 524. All scientific seawater system instrumentation must provide data output to the SCS.

The temperature sensor, **Sea-Bird Electronics Model SBE-3**, or equal, must be located in the common seachest header, as close as possible to the shell.

The thermosalinograph, **Sea-Bird Electronics Model SBE-21**, or equal, and associated electro-optical isolation interface junction box must be provided in the Chemistry Laboratory. The thermosalinograph must be provided with input from the Computer Laboratory GPS unit and from the scientific seawater system flow meter.

The continuous flow fluorometer, **Turner Designs Model 10-AU-005**, or equal, must be provided in a NEMA 4 enclosure and connected to a flow controlled branch line in the scientific seawater system. The fluorometer must be located in the Chemistry Laboratory.

Space and weight shall be provided for a continuous flow particle counter system . The system will be enclosed in a NEMA 4 enclosure and will consist of a single particle sizing system, HIAC ROYCO Optisizer Model 9064, a laser diode sensor, HIAC ROYCO Model HRLD-2500, a constant flow controller, HIAC ROYCO Model 800 CL, and Particle Distribution Analysis Software (PDAS). An acquisition and display system in accordance with manufacturer's recommendations must be provided and must be rack mounted in the Computer Laboratory. The particle counter

sensor must be connected to the scientific seawater system. The particle counter must transmit data to the acquisition and display system in the Computer Laboratory.

The flow meter must include a flow sensor, **+GF+Signet Model MK 515 Rotor-X**, or equal, and two flow monitors, **+GF+Signet Model 5500 ProPoint**, or equal with 4-20 mA output signal and low flow alarm. The flow sensor must be located in the common seachest header. One flow monitor must be installed near the flow sensor and the second installed in the Computer Laboratory. The 4-20 mA output must be connected to one of the auxiliary analog input channels of the thermosalinograph. The alarm annunciator must be located in the Chemistry Laboratory.

[ECP 0014] Power for the scientific seawater system instrumentation ~~and pump~~ must be from the Scientific Uninterruptible Power System.[ECP 0014]

493g. Meteorological Equipment

One weather facsimile (Weatherfax) must be provided in the Radio/Chart Area. In addition, the following scientific meteorological equipment must be provided:

a. Electronic air temperature sensing unit, **R.M. Young Model 41342**, or equal, mounted on the top of the Bridge.

b. Two solar radiation units, **Epply Laboratories Model PSP and Model PIR**, or equal, mounted on the top of the Bridge.

c. Humidity sensing unit, **Rotronics TM 12R-S**, or equal, mounted on the top of the Bridge.

d. Wind speed and direction sensing unit, **R.M. Young Model 5106**, or equal, mounted on the main mast.

e. Display unit, **R.M. Young Model 26700**, or equal, in the Computer Laboratory, for display of wind speed, direction, air temperature, and humidity.

f. A barometric sensing unit, **Atmospheric Instrument Research Model AIR-DB**, or equal, with the sensor in the weather and the display in the Radio/Chart Area, indicating outside barometric conditions.

All scientific meteorological sensors must be installed in locations having clean, unobstructed airflow, away from interferences, exhaust gases and vents that could impact sensor data accuracy. The display unit in the Computer Laboratory must output all acquired data to the SCS, as must the solar radiation sensors and the barometric sensing unit.

In addition to the scientific system defined above, a separate navigational system consisting of two wind speed and direction sensing units, **Belfort Aerovane Model 4-120**, or equal, must be provided, with analog readouts at the SCC, starboard bridge wing ship control console, and the ACS. An interswitch for selecting between the wind speed and direction sensing units must be provided.

Navigational wind speed and direction input must be provided to the DPS.

[ECP 0014] Power for the scientific meteorological system must be provided from the Scientific Uninterruptible Power System.[ECP 0014] Power for the navigational wind speed and direction system must be provided from the navigation and ship control power system.

493h. Sea Surface Temperature System

The Contractor must provide a sea surface temperature sensing system. The system must consist of three seawater temperature sensors such as **Furuno Inc. Model T-03MSB**, three seawater temperature sensor cofferdams with removable covers and stuffing tubes, three digital temperature indicators such as **Furuno Inc., Model T2000**, associated foundations and interconnecting cabling. Each digital temperature indicator must include an RS-232 output interface. The digital temperature indicators must be rack mounted in the Computer Laboratory, with data input to the SCS. [NECP 001]The temperature sensors must be located in the ~~Auxiliary Machinery Room~~General Stores compartment, as far forward of the main seawater cooling system discharge as possible, equally spaced from 0.5 to 2.0 meters below the design waterline. [NECP 001]

[ECP 0014] Power for the sea surface temperature system must be provided from the Scientific Uninterruptible Power System.[ECP 0014]

493i. Scientific Computer System (SCS) Network

In addition to the network and equipment specified herein, space and weight must be provided for the Scientific Computer System. The Government must have access to the laboratories, ET Shop, Ship's Office, Bridge and Radio/Chart Area to install SCS computer hardware onboard the ship after acceptance trials.

Equipment that transmits data to the SCS must be capable of operating, obtaining signal inputs, and performing required functions without the use of the SCS. If available as an option, NMEA 0183 must be the output data format for all systems and equipment that transmit data to the SCS.

The Contractor must install a computer data distribution network, consisting of separate runs of primary and backup fiber optic and primary and backup copper network cabling, plus separate runs of RS-232 cabling for sensors and equipment required to transmit data to the SCS. The fiber optic and copper network cables must be installed from common patch panels located in the Computer Laboratory to the locations listed in Table 493-1. The RS-232 sensor cabling must be installed from patch panels located in the Computer Room to the equipment listed in Table 493-2 and to the spaces listed in Table 493-3. The Contractor must provide the services of trained and certified fiber optic and copper network field technicians to supervise the installation and testing of the Contractor-supplied network components.

A wiring diagram showing all computer network cable runs must be provided. Wiring must be color coded and tagged for identification at the cable level as well as at the conductor level. Bulkhead and panel connector labels must be visible without removal of hardware.

The primary and backup fiber optic cabling for the computer network must be duplex, multimode, graded index low smoke, flame resistant, low halogen fiber optic cable 62.5 µm fiber core diameter, 125 µm cladding diameter. Primary and backup cable runs must be in separate wireways to the extent practicable while primary and backup terminal boxes for each location in Table 493-1 must be as close to one another as practicable.

The primary and backup copper network cabling must consist of certified 550 MHz Category 5e shielded low smoke, flame resistant, low halogen cabling, run in the same wireways as the fiber optic network cabling. To the extent practicable, the terminations for the locations listed in Table 493-1 must be the terminal boxes used for the fiber optic network if the location has both types of cabling.

The RS-232 sensor cabling must be extended distance four-pair serial cable such as **Belden, Inc. Model 8104**. Sufficient extra cable, not less than 3000 mm, must be provided at each end of each cable run to allow for relocation.

Bulkhead mounted terminal boxes fitted with two ST-type couplers and two Category 5e-type couplers must be installed to terminate the cabling required in Table 493-1. Laboratories must be provided with such terminal boxes in quantities such that they are spaced no more than 2500 mm apart along the bulkheads. Where equal numbers of fiber optic and Category 5e cabling is not required, terminal boxes must be provided with cover plates for unused openings. Watertight terminal boxes must be provided in exposed locations. Cable entrances to terminal boxes must include strain relief devices.

Fiber optic cable in the Computer Laboratory must be terminated using in-line "ST" connectors for each fiber. Each copper network cable must terminate in a Category 5e certified connector. The connectors must be wrapped to protect them from humidity, and secured off the deck. Sufficient slack, not less than 3000 mm, must be provided in each cable in the Computer Laboratory to reach any location within the Computer Laboratory.

RS-232 sensor cable connected to the equipment identified in Table 493-2 must be terminated with sufficient slack to allow two subsequent reterminations at the sensor end and with sufficient slack in the Computer Laboratory to reach the most remote location in the space. RS-232 sensor cable run to the spaces identified in Table 493-3 must be terminated with sufficient slack at each end to reach the most remote location in the space.

A primary fiber optic cable and a primary Category 5e cable must be provided from the Computer Laboratory to the shore telephone connection box.

A fiber optic patch panel must be installed in one of the 19-inch standard instrument racks required in the Computer Laboratory by Section 667. Sufficient ST to ST couplers must be installed in the panel to accommodate all fiber optic cables terminating at the panel, plus 15 percent spares. Each of the fibers terminating at the panel must be connected to the patch panel from the rear.

A Category 5e network cabling patch panel must be installed in one of the 19-inch standard instrument racks required in the Computer Laboratory by Section 667. Sufficient Category 5e to Category 5e couplers must be installed in the panel to accommodate all Category 5e network cables terminating at the panel, plus 15 percent spares. Each of the fibers terminating at the panel must be connected to the patch panel from the rear.

Table 493-1. Network Terminal Locations

Location	Fiber Optic Terminals	Category 5e Terminals
Ship Control Console	1	1
Radio/Chart Area	4	4
Aft Control Station	1	1
Bridge	4	4
Single Staterooms (each)	1	1
Double Staterooms (each)	1	2
Conference Room	1	2

Location	Fiber Optic Terminals	Category 5e Terminals
Hospital	1	1
Van site	0	2
Lounge	1	2
Ship's Office	1	3
Ready Room	0	1
Wet Laboratory	1	As Required
Dry Laboratory	1	As Required
Chemistry Laboratory	1	As Required
Hydrographic Laboratory	1	As Required
Acoustic Laboratory	1	2
Fish Laboratory	1	4
Computer Laboratory	0	10
Marine Mammal Observation Area	1	1
EOS	1	1
Side Sampling Station	1	1
Aft Working Deck	1	1
01 Level Aft, Starboard	1	1

Table 493-2. SCS Connected Equipment

SCS Connected Equipment
Scientific Differential GPS Unit
Doppler Speed Log
Electromagnetic Speed Log
Gyrocompass
Inertial Reference System
INMARSAT B (quantity 2)
Satellite communication System
IBS (Shaft Speed and Direction of Rotation)
Acoustic Net Mensuration System
Fish Finding System
Expendable Bathythermograph System
Scientific Seawater System Temperature Sensor
Scientific Seawater System Thermosalinograph
Scientific Seawater System Fluorometer

SCS Connected Equipment
Scientific Seawater System Particle Counter
Scientific Seawater System Flow Meter
Sea Surface Temperature Sensing System (quantity 3)
Meterological Display Unit
Solar Radiation Sensor (quantity 2)
Barometric Sensor
Multibeam Imaging Sonar
Net Sonde System
Passive Sonar System
Trawl Winch Control System
Oceanographic Winch Slip Rings
Hydrographic Winch Slip Rings (quantity 2)
Drop Target Strength Winch Slip Rings
Winch Instrumentation System (quantity 3)
Sorting Table Digital Scale (quantity 3)
Crane Hook Load Scale (quantity 2)
Master Clock
Acoustic Doppler Current Profiler
Scientific Sounder System

Table 493-3. Spare Sensor Cables

Location	Cable Quantity
Main Mast	4
Foremast	4
Marine Mammal Observation Area	2
Radio/Chart Area	4
Bridge	4
Van site	4
Wet Laboratory	8
Dry Laboratory	8
Chemistry Laboratory	8
Hydrographic Laboratory	8
Acoustic Laboratory	8
Fish Laboratory	16

Location	Cable Quantity
Side Sampling Station	2
Aft Working Deck	2
EOS	1
Main Machinery Space	1

==========

500 AUXILIARIES GROUP

503 PUMPS

Pumps must be in accordance with Section 073. Rotary pumps must be in accordance with ASTM F1718 and F1510, as appropriate for service. Fuel service pumps must be in accordance with ASTM F1718[PA35]. Centrifugal pumps must be in accordance with ASTM F998. All pumps must have mechanical seals in accordance with ASTM F1511.

Pumps must be suitable for intended service, must operate at or near the maximum efficiency point on the head-capacity curve at design conditions, and must have non-overloading power characteristics. Pumps for fuel and lube oil service must be positive displacement pumps. Pumps for seawater service must be of materials suitable for continuous service in seawater, and must be compatible with the specified piping system materials.

Shafts of horizontal pumps must be oriented fore and aft.

Where two or more pumps of the same size and type are required for a particular service, they must be identical.

Bases for pumps handling lubricating oil and fuel must be provided with troughs and drain to the oily waste system. [NECP 001]Unless fitted with mechanical seals, ~~B~~bases for pumps handling water and waste water, except for sewage pumps, must be provided with drains which terminate in the nearest bilge well. Means must be provided for venting seawater pumps into the nearest ~~bilge well~~pump pan. [NECP 001]

504 INSTRUMENTS AND INSTRUMENT BOARDS

504a. General

Instruments and gage indications must be in metric units of measure.

Instruments and their components must be of rugged construction, for marine service, and not adversely affected by vibration, temperature, moisture, impact or dust and tailored to their particular applications. Instruments must be waterproof, and protected, to prevent moisture and other corrosive elements from damaging the instruments. Failure or removal of an instrument may not cause the instrument system to be inoperable.

Instruments must be calibrated no more than three months prior to ship delivery. The calibration method and date of calibration must be recorded.

504b. Tank Level Indicators

All tanks must be equipped for local sounding. The following tanks must be provided with tank level indicators such as **Consilium US, Inc. Metritape, or Gems Sensors, Inc. XM/XT-36490 Series**:

a. Fuel storage tanks.
b. Fuel service tanks.
c. Lube oil storage tanks.
d. Oily waste holding tank.
e. Waste oil tank.

f. Ballast tanks.

g. Potable water tanks.

h. Waste water holding tank.

A tank level indicating system must be provided for the roll stabilization tank in accordance with Section 565.

Readouts for tanks with level indicating systems must be provided in the MCS, and locally at each tank's operating station as required.

High level alarm sensors must be provided for fuel storage and service tanks, waste oil tanks, lube oil storage tank, oily waste holding tank, waste water holding tanks and ballast tanks. High and low level control sensors must be provided for the oily waste holding tank. The high and low level sensors must be integrated into the appropriate tank level indicating unit.

[NECP 001]Chilled water expansion tanks~~, potable water hydropneumatic tank~~ and fresh water cooling system expansion tanks, if provided, must be provided with sight glass level indicators. [NECP 001]

Scales must be graduated in accordance with Table 504-1.

Table 504-1. Tank Level Indication Graduations

Service	Graduations
Fuel	Meters, centimeters, and cubic meters
Lube Oil	Meters, centimeters, and liters
Seawater	Meters, centimeters, and cubic meters
Potable Water	Meters, centimeters, and cubic meters
Oily Waste	Meters, centimeters, and liters
Waste Water	Meters, centimeters, and liters
Waste Oil	Meters, centimeters, and liters

504c. Shaft Revolution Counter

A shaft revolution counter must be provided. The counter must provide continuous operation with rollover at 10,000,000 revolutions.

505 PIPING

505a. Design

All piping systems must be in accordance with Section 073.

Except for the specific free stream velocity limits specified herein, velocity in pipe must be based on meeting the following criteria:

a. Underwater radiated noise requirements of Section 073.

b. Minimum required inlet pressures of machinery, equipment and components under maximum required flow conditions.

c. Inlet velocity limitations of installed machinery, equipment and components.

The maximum allowable velocities for the various system fluids, in conjunction with the line sizing, must be based on pressure drop determined by pressure and flow requirements of equipment and appurtenances within a system without imposing an increase in the system's pumping capacities.

Velocity of water in constantly running systems may not exceed 3.7 m/s free stream velocity.

Sea water or brine velocity, in m/s, may not exceed 5 times the square root of the inside diameter of the pipe in centimeters, and may not exceed 3.7 m/s. The velocity of seawater and brine at inlet nozzles of and within tubular heat exchanger units may not exceed 1.8 m/s.

Fuel system velocities must be limited to a maximum of 4.6 m/s for shipboard operations (suction, discharge and transfer), except that for taking-on and unloading operations, the maximum allowable velocity must be 7.6 m/s.

505b. Materials

Piping system material must be in accordance with ASTM F1155, as modified by Table 505-1 and as specified herein.

Cu-Ni piping must be used for all seawater systems, except for the scientific seawater system.

[NECP 001]Hydraulic piping, tubing and fittings exposed to the weather must be CRES, except that hose fittings may be steel wrapped in protective tape such as **DensoWrap**. [NECP 001]

Piping fabricated from electrical resistance welded Schedule 40 steel tubing, lined with polypropylene (ASTM D4101), mechanically locked to the pickled interior of the tubing by swaging, must be used for all sections of the scientific seawater system. All system fittings and components must be polypropylene lined and all pipe joints must be flanged, with all joints accessible for maintenance.

Table 505-1. Modifications to ASTM F1155

1. Copper-Nickel or bronze body valves must be used with Copper-Nickel piping systems.
2. Where ASTM A53 steel pipe is specified, ASTM A106 steel pipe may be used as a substitute.
3. Where plastic pipe is specified, ASTM F1173 fiberglass pipe (FGP) may be used as a substitute provided it meets the requirements of USCG NVIC 11-86. Plastic pipe may not be used in areas exposed to the weather, except that it may be used for deck drains.
4. Where steel pipe flanges are specified, forged steel ANSI flanges may be used as a substitute.

5. Where ASTM B171 copper alloy condenser tube plate is specified, ASTM B467, 90-10 Cu-Ni pipe may be used as a substitute.
6. Threaded pipe may be used only in pipe sizes smaller than 61 mm outside diameter. [NECP 001]Where threaded pipe is used, flanged takedown joints or unions must be provided at the inlet and discharge of each item of equipment installed in the piping system. [NECP 001] There may be no threaded joint between the hull penetration and the first flanged takedown joint.
7. [NECP 001]Use of butterfly valves is prohibited, except where such valves are an integral part of a vendor-supplied item, or where specifically approved by the ConRep. [NECP 001]

505c. Installation

The selection, fabrication and installation of flexible hose assemblies and resilient pipe hangers must be in accordance with regulatory requirements and Section 073.

Piping must be attached to resiliently mounted machinery using flexible hoses. The installation must consist of two lengths of flexible hose coupled with 'U' or 90 degree elbow bend fittings, as applicable. The metal bend fitting must be supported with flexible pipe hangers when required.

Resilient pipe hangers must be selected and loaded so that the lowest natural frequency of each supported pipe section is no greater than 7 Hz. Hanger systems must be designed to constrain the motion of the piping system to less than 25 mm under a 2g load in any direction. Pipe hangers may not be attached to resiliently mounted equipment. Flexible bulkhead penetrations must be provided where necessary, as determined by the noise control program.

Flexible hoses must permit maximum excursion expected in the resiliently mounted equipment without overstressing piping or expansion joints or bending hoses more sharply than the manufacturer's recommended minimum radius.

506 VENTS, SOUNDING AND OVERFLOW ARRANGEMENTS

All tanks, cofferdams and other non-ventilated spaces must be provided with venting, overflow capability, sounding arrangements and level indication as required.

Vents, sounding tubes and overflow pipes must be kept clear of the working areas of the Aft Working Deck and Side Sampling Station as far as practicable.

Sounding tubes must terminate a minimum of 1000 mm above the highest part of the tank, and must terminate in the weather as far as practicable. Sounding tube terminations are prohibited in laboratories, electronics spaces, habitability spaces, trawlway, van site, and under portable equipment.

Vents and overflows connecting to oil-containing tanks must be confined within deck coamings to contain any tank overflow or spillage and prevent discharge to the sea in accordance with regulatory requirements.

507 MACHINERY AND PIPING SYSTEM DESIGNATION AND MARKING

Systems, associated components, piping and appurtenances must be readily identifiable as to their function, operational characteristics, service and direction of flowing medium.

Valve label plates must be in accordance with ASTM F992 and must be securely attached to all valves.

Piping Designation. - Piping systems must be identified every 4000 mm within a compartment, by markings consisting of bands approximately 75 mm wide of each color identified in Table 507-1, plus arrows indicating flow direction. In addition, each piping system must have stenciled on it the system type abbreviation in at least one prominent location in each space.

Other piping systems must be marked with distinguishing color and abbreviations.

Table 507-1. Piping Designation and Marking

System	Color	Abbreviation
Fresh Water, Machinery Cooling	Dark blue	COOLING FW
Fresh Water, Potable	Light blue	POTABLE
Seawater	Green	SW
Fire Systems and Mains	Red	FIREMAIN
Diesel Fuel	Brown	DIESEL
Lubricating Oil	Yellow	LO
Hydraulic Systems	Orange	HYDRAULIC
Ship Service Air	Black	SS AIR
Starting and Control Air	White	S/C AIR
Sewage	Brown/Yellow	SEWAGE
Vacuum	Yellow/Red	VACUUM
Chilled Water	Green/Blue	CHILLED
Divers Air	Black/White	DIVERS AIR

508 INSULATION FOR MACHINERY AND PIPING

The Contractor must provide insulation and lagging in accordance with ASTM F683, Standard Practice for Selection and Application of Thermal Insulation for Piping and Machinery, except for the following:

a. Surface maximum temperatures must be 52 degrees C.

b. Materials must be in accordance with SOLAS and the FTP Code.

Preformed materials must be provided with a vapor seal where required.

The scientific seawater system piping must be insulated to ensure the maximum temperature change of the seawater is 1 degree C from the intake to the most remote fixture, under the extremes of environmental conditions defined in Section 070.

509 THERMAL INSULATION AND ACOUSTIC ABSORPTIVE TREATMENT FOR DUCTS AND TRUNKS

Heating, ventilation and air conditioning systems (including equipment, access covers, flanges, and recirculation ducts) must be covered with the specified type of insulation to prevent sweating and external heat transfer.

Air conditioning preheaters, ducts, cooling coils, fans and other equipment carrying chilled or recirculated air must be completely insulated with an approved vapor seal, unless condensation can be controlled by other means.

Acoustic treatment must be provided to attenuate system generated noise.

The type and thickness of insulation and area of application must be as follows:

a. **Air Conditioning Supply Systems** - 25 mm insulation, vapor seal and lag completely.

b. **Air Conditioning Return Systems** - 25 mm insulation in non-air-conditioned areas. Lag and vapor seal in hot or wet spaces. Lag exposed insulation in other spaces.

c. **Ventilation Supply Systems** - 25 mm insulation except as noted in f.

d. **Ventilation Exhaust Systems Exhausting Unheated Spaces and Passing Through Heated Spaces** - 25 mm insulation in heated space.

e. **Exhausts From Heat Producing Spaces** - 25 mm insulation where passing through heated, ventilated (on a degree rise basis) or air conditioned spaces.

f. **Ventilation Heating Supply Systems** - 25 mm insulation except exposed ducts within the space served.

Portions of all supply, air conditioning and recirculation systems passing through machinery spaces and ducts passing through exhaust hoods must have a 50 mm thickness of insulation applied. They must also be vapor sealed and lagged where specified herein. Exposed ventilation ducts serving only the space in which they are located need not be insulated, unless they serve a heat producing space. Supply trunks and ducts in the casings and uptakes must be insulated. All ventilation ducts, including supply and exhaust, passing through air conditioned spaces must be insulated.

Thermal insulation on rectangular ducts must be incombustible board, with minimum density of 24 kg/m^3. Vapor seals must be factory applied aluminum foil with a minimum thickness of 0.05 mm. Insulation on round and flat oval ducts and bends must be the same as specified for rectangular ducts, except it may be of the flexible blanket-type. Joints of vapor seal must be lagged, 50 mm minimum, or sealed with 75 mm wide aluminum foil tape. To ensure integrity of vapor barrier, joints must also be coated with an approved vapor sealing compound, compatible with the aluminum foil vapor barrier. Thermal insulation must be installed on duct exterior.

Where required, acoustic insulation must be installed in duct interiors, and must be incombustible board, 48 kg/m^3 minimum density. The airside surface of acoustic insulation must have treatment similar to that required for Type I and Type II acoustic insulation (as applicable), as required in Section 073. Insulation (both thermal and acoustic) must be secured to duct with adhesive. Insulation on rectangular ducts over 600 mm wide and on plenums must be further fastened with metal clips, pins or studs (spacing as approved) secured to the insulated surface. Adhesive must be chemically compatible with the insulated surface.

Galvanized metal sheathing or guards must be provided in areas where insulation may be subject to damage. Metal sheathing thickness must be compatible with the area covered, but in no case less than 16 USSG steel.

Acoustic absorptive treatment for HVAC systems may be necessary to meet the space noise criteria. Except for Type IV treatment, where both thermal insulation and acoustic absorptive treatment are necessary, only acoustic absorptive treatment may be installed.

512 HEATING, VENTILATION AND AIR CONDITIONING (HVAC)

The following spaces must be air conditioned:

a. Staterooms
b. Offices
c. Hospital
d. Lounge
~~e.~~[NECP 001]~~Galley~~[NECP 001]
~~f.~~e. Messroom
~~g.~~f. Conference Room
~~h.~~g. Bridge
~~i.~~h. Laboratories
~~j.~~i. Ready Room[PA36]
~~k.~~j. ET Shop
~~l.~~k. Side Sampling Station Control Booth
~~m.~~l. Exercise Room
~~n.~~m. Engineer's Operating Station
~~o.~~n. Passageways within air conditioned zones
~~p.~~o. Dry Stores
p. [ECP 0003D]HAZMAT Stowage Locker[ECP 0003D]

All other interior spaces with the exception of tanks and chain lockers must be mechanically ventilated and heated.

Thermostats in the Messroom, Lounge, Conference Room and Exercise Room must be provided with locks.

512a. Design Criteria

HVAC systems must be in accordance with Section 073 and the design criteria of Table 512-1.

HVAC calculation procedures must be in accordance with SNAME Technical and Research Bulletin No. 4-16. Heat load calculations must use specific equipment heat dissipation data when available.

Spaces requiring natural supply or exhaust ventilation, without direct connection to the weather, may have doors fitted with louvers in the lower panel or door undercuts. The maximum air velocity through free openings may not exceed 2.0 m/sec. Jumper ducts are prohibited in fire rated boundaries.

In general, passageways within an air-conditioned zone should be used for recirculation air return. The air velocity may not exceed 0.8 m/sec.

Fan motors must be of the direct drive-type for operation in either a horizontal or a vertical plane, and must be provided with individually controlled heaters.

Fans must be marine duty fans modified to incorporate permanently lubricated sealed bearings.

Electric preheaters with a capacity above 3 kW must have step control (minimum three step) with steps activated by outside air temperature.

Electric reheaters with capacity above 1.5 kW, with 8 degrees C or more temperature rise in air, must have three step electrical controls. Reheaters must be controlled by room thermostats. Electric reheaters with less than 8 degrees C temperature rise in air must be controlled by ON-OFF contact makers.

Systems opening to weather must be designed and located to prevent shipping seawater, driving rain, or spray.

HVAC fresh air intakes must be routed such that exhaust gas from the stack and lab spaces will not be drawn into any spaces.

The Fish Laboratory and Wet Laboratory HVAC systems must maintain negative pressure relative to adjacent spaces and may not recirculate. The exhaust from the Fish Laboratory and Wet Laboratory must be separate from all other exhaust systems.

[NECP 001]The Hydrographic Laboratory HVAC system must be designed in accordance with Table 512-1, but insulation may not be installed on the exterior bulkheads of the space. [NECP 001]

Table 512-1. HVAC Design Criteria

Criteria	Cooling Season	Heating Season
Seawater Temperature	32 °C	-3 °C
Outdoor Air Temperature	35 °C dry bulb/28 °C wet bulb	-18 °C
Preheat Temperature	N/A	6-10 °C range
A/C Laboratories and Hospital	24 °C dry bulb, 55 percent relative humidity (maximum)	21 °C, 35 percent relative humidity (minimum)
[NECP 001]A/C Controlled Environment Room	0 –to 15 °C, +/- 1 °C	0 –to 15 °C, +/- 1 °C
A/C Autosalinometer Room	20 –to 25 °C, +/- 1 °C	20 –to 25 °C, +/- 1 °C[NECP 001]
All other A/C spaces	27 °C dry bulb, 55 percent relative humidity (maximum)	21 °C, 35 percent relative humidity minimum (except in the EOS where the heater must be sized for 18 °C minimum)

Criteria	Cooling Season	Heating Season
T/S and Public Toilets	4 minute rate of change	21°C
Galley and Scullery	41 °C	10 °C
Dry Stores	29 °C	16 °C
Laundry	41 °C	21 °C
[ECP 0003D]Hazmat Stowage Locker	26 °C	13 °C[ECP 0003D]
Ventilated spaces	In accordance with SNAME Technical and Research Bulletin No. 4-16	
Minimum air quantity may not be less than 16.5 L/sec/terminal or space.		
Replenishment Air	In accordance with SNAME Technical and Research Bulletin No. 4-16.	
External Boundary Temperature	To be used for all spaces in accordance with SNAME Technical and Research Bulletin No. 4-16.	To be used for all spaces in accordance with SNAME Technical and Research Bulletin No. 4-16.

512b. Air Conditioning Systems

The air conditioning systems must be of the assembly or built-up type consisting of a throwaway-type filter (preceding the cooling apparatus and housed in a permanently hinged clamshell housing), cooling apparatus and fans. The cooling coils must be selected for use with 7 degree C chilled water at 0.25 L/sec/ton.

Air conditioning recirculation systems must be provided with rehumidification equipment to maintain the required minimum relative humidity during the heating season.

The filter media must be 50 mm thick fiberglass held in place by 50 by 50 mm retaining wire mesh screen attached on both sides of the filter housing. The mesh may not protrude beyond the frame. Means must be provided to remove and replace filters simply and without extensive disassembly.

For air conditioning plant and duct sizing, the Computer Laboratory must be considered to produce a 20 kW equipment heat load, and the Acoustic Laboratory must be considered to produce a 10 kW heat load. The Chemistry Laboratory, Dry Laboratory, Autosalinometer Room and Controlled Environment Room must be considered to produce equipment heat at the rate of 215 watts/m^2 of deck area.

Laboratories must be provided with a minimum of 6 changes per hour of air-conditioned air. The air conditioning system serving the Hospital must have a dedicated exhaust to weather located to preclude ingestion of exhaust fumes in the HVAC supply ducting. The air conditioning serving the Chemistry Laboratory, Dry Laboratory, Fish Laboratory and Wet Laboratory must be in accordance with 46 CFR Subchapter U and SOLAS regulations for chemistry laboratories. Other laboratory air conditioning systems must be provided with a fresh air change rate of at least three changes per hour.

The fresh air supply to laboratory air conditioning systems must be provided with prefilters and High Efficiency Particulate Air (HEPA) filters. HEPA filters must have a 99.97 percent efficiency when tested with 0.3 micron thermally generated particulates.

Installation of duct sections, cooling coils or fan coil units over the following and similar equipment must be avoided:

a. Computers
b. Control panels
c. Electric equipment
d. Generators
e. Generator terminals
f. Load center and power distribution panels
g. Switchboards
h. Transformer terminals

If ducting must be routed over such equipment, the ducting must either be of watertight construction or made driptight.

Air conditioning duct runs through non-air conditioned spaces must be avoided. If ducting must be routed through such spaces, ducts must be insulated in accordance with Section 509.

512c. Heating System

Heating must be electric. Electric duct heaters used as preheaters or as reheaters for compartments served by mechanical supply and as reheaters on air conditioning supply branches must have a temperature rise across the heater not below the heater manufacturer's recommended minimum temperature rise. Convection heaters must be provided in fan rooms housing chilled water coils, T/S and Toilets, and where required in compartments with natural air supply. Unit heaters must be provided in machinery spaces, in compartments which require heat but are not served by a mechanical supply, in compartments requiring heat when the ventilation systems are secured, and in non-air-conditioned compartments whose duct heater would require a delivery air temperature greater than 43 degrees C.

512d. Ventilation System

The ventilation system fans must have two speeds: high speed for use in the cooling season, and low speed for use in the heating season. The ratio of the high to low speed must be 2-to-1. Exhaust fans serving hoods and their companion supply fans must be single speed.

Ventilation ducting must be accessible for cleaning.

Ducts and fittings within 5000 mm of the weather intake or discharge side must be CRES.

Exterior ventilation weather openings in the vicinity of the Working Deck area must be located a minimum of 3000 mm above the deck.

An exhaust system terminal must be located approximately 250 mm above the deck in the immediate vicinity of air conditioning and refrigeration machinery.

Ventilation grease interceptor hoods must be installed in the Galley over cooking equipment. Exhausts from the Galley grease interceptor hoods must be ducted directly to weather.

Laboratory fume hoods must be provided in locations and quantities specified in Section 667. Volumetric air flow for both permanent and itinerant fume hoods must be at least 2.5 m^3/min per m^2 of hood opening.

512e. Machinery Space Ventilation

Mechanical supply and natural exhaust ventilation systems must be provided for the machinery spaces. Machinery space ventilation must utilize the concept of spot cooling. The location of the supply fans and ducting must be such that short circuiting of exhaust air or stack gas is avoided.

The mechanical supply systems must be provided with non-return dampers if fans are operating in parallel and bypass through a secured or failed fan would otherwise occur.

512f. Technical Documentation

HVAC Calculations. - HVAC calculations must be prepared and must identify equipment loads. Guidance relative to determination of heating and cooling loads and selection of heat transfer coefficients must be in accordance with SNAME Technical and Research Bulletin Nos. 4-16 and 4-7.

514 AIR CONDITIONING

Air conditioning systems must be in accordance with Section 073.

514a. Air Conditioning Refrigeration Plants

Cooling must be provided by means of circulating chilled fresh water to air cooling coils as defined in Section 512. The machinery providing the chilled water must consist of two equally sized chilled water units. The units must be designed for automatic operation, and for use with HFC-134a refrigerant.

The units must be sized so that the capacity of either unit can accommodate 65 percent of the total connected load, including chilled water pipe and pump losses, under design conditions.

Sea water cooled condensers must be of the titanium flat plate type, or provided with 90-10 copper-nickel tubes, tubesheets and heads.

The units must be sized according to Table 514-1.

Table 514-1. Air Conditioning Plant Design Criteria

Saturation suction temperature	2 ^{o}C
Condensing temperature	43 ^{o}C
Chilled water outlet temperature	7 ^{o}C
Chilled water flow	13.6 L/min/ton of air conditioning
Sea water temperature	35 ^{o}C
Sea water velocity (maximum)	1.8 m/s
Condenser's fouling factor	0.0005
Condenser's maximum pressure drop	34.5 kPa

514b. Chilled Water System

The chilled water system must service the cooling coils specified in Section 512.

The system must consist of chilled water plants, chilled water pumps, a chilled water expansion tank, piping, valves, instruments and controls. A minimum of three chilled water pumps must be provided (one per air conditioning plant, one standby) with the capability of being cross-connected. Each chilled water pump must be sized for the full capacity of a chilled water plant. The expansion tank must be sized for a water capacity equal to 10 seconds pumping capacity at the chilled water pumps. The recirculation valve must be installed between the chilled water pump discharge and the chilled water return to the air conditioning unit maintaining at least 1/3 of the design chilled water flow during periods of low demand. Where air conditioning plant(s) are installed in a compartment, a vacuum pump, refrigerant receiver tank and purge and pumpout unit must be installed in that compartment. The receiver tank must serve a maximum of two air conditioning plants. When selecting size of piping, consideration must be given to providing both minimum pressure drop and maximum flow capacity. The water velocity may not exceed 3.7 m/sec in the mains, cross-connection and risers, and 2.7 m/sec in the branches.

516 REFRIGERATION EQUIPMENT

Refrigeration plants must be in accordance with Section 073.

The refrigeration machinery for the chill and freeze storerooms and scientific freezer must consist of three packaged condensing units, designed for HFC-134a refrigerant. Refrigeration machinery for the Controlled Environment Room, other scientific freezers and other galley refrigerators and freezers must be packaged units. Each packaged unit must be designed for automatic operation.

The refrigeration plants must be sized to accommodate the heat gains of refrigerated spaces from boundary transfer, product heat loads, air infiltration and door opening changes and with the criteria contained in Table 516-4.

Calculation of heat loads must be based on the boundary surface temperatures, space design temperatures, product heat load, air infiltration, insulation U-factors and the criteria contained in Tables 516-1 through 516-3. The temperature and method of cooling must be in accordance with Table 516-3.

Product heat loads must be calculated on the basis that total product volume equals 0.5 times the internal volume (insulation to insulation) of the refrigerated space.

The refrigeration systems for the chill and freeze storerooms must be identical, and must be designed so that both chill and freeze storeroom refrigeration plants are required to be in operation during pulldown condition, and one refrigeration plant is placed in standby service during normal operation. The capacity of the condensing units must be based on 24 hours of normal operation per day with standby unit secured.

The chill and freeze storerooms and scientific freezer refrigeration plants must be capable of 24 hour operation per day during pulldown conditions.

Air cooler fan capacity must be at least one air change per minute with the compartment empty. Two air coolers must be provided for each space. Both air coolers may be running simultaneously during pulldown. The air coolers must be sized so that either one is capable of carrying the normal load. Defrosting of air coolers or bulkhead coils below 2 °C must be automatically accomplished by built-in electric heating.

Each refrigerated space must be provided with a remote thermometer accurate to plus or minus 1 °C.

A red indicator must be installed on each dial thermometer for walk-in reefers to show maximum temperature allowance for each reefer.

Table 516-1. Refrigeration Plant Design Criteria

Compressor's Condensing Temperature	43 °C
Compressor's Suction Temperature	-29 °C
Condenser's Fouling Factor	0.0005
Condenser's Water Velocity	1.8 m/s (maximum)
Condenser's Pressure Drop	34.5 kPa
Liquid Receiver Storage Capacity	120 percent of total system refrigerant charge for each unit
Condensing Water Rate	Not to exceed 89.7 L/Mj of refrigeration

Table 516-2. Boundary Surface Temperatures

Boundary of Refrigerated Space	Surface Temperature (degrees C)
Surface exposed to sun	63 °C (horizontal surfaces) 52 °C (vertical surfaces)
Surface exposed to water	35 °C
Adjacent machinery space	49 °C
All other spaces	38 °C

Table 516-3. Space Design Temperatures

Compartment	Design Temperature	Loading Temperature	
Chill Storeroom	2 °C	13 °C	
Freeze Storeroom	-18 °C	-9 °C	
Scientific Freezer	-18 °C	-9 °C	

Table 516-4. Product Heat Load

Compartment Type	Average Product Weight (kg/m^3)	Average Product Specific Heat (Kj/Kg)	Average Container Weight (kg/m^3 of Product)	Average Container Specific Heat (Kj/Kg)	Product Respiration Rate ((Kj/Kg) - 24 hours)	
					Entering Condition	Final Condition

Compartment Type	Average Product Weight (kg/m^3)	Average Product Specific Heat (Kj/Kg)	Average Container Weight (kg/m^3 of Product)	Average Container Specific Heat (Kj/Kg)	Product Respiration Rate ((Kj/Kg) - 24 hours)	
					Entering Condition	Final Condition
Chill Storeroom	476	2.0	51.2	1.5	7.4	2.5
Freeze Storeroom	575	0.9	58.3	1.5	--	--
Scientific Freezer	575	0.9	58.3	1.5	--	--

521 FIREMAIN SYSTEM

The firemain system must be in accordance with Section 073.

The firemain must be a dry system. Three fire pumps must be provided for the ship. One fire pump must be dedicated to firemain service only. The other two pumps may be other service pumps suitable for firemain service. Recirculation lines for the pumps must be provided.

524 AUXILIARY SEAWATER SERVICE SYSTEMS

Auxiliary seawater service systems must be in accordance with Section 073.

524a. Auxiliary Seawater Cooling System

An auxiliary seawater cooling system must be provided for cooling of the chill and freeze storeroom and scientific freezer refrigeration plants, the bow thruster motor and other auxiliary machinery as required.

[NECP 001]Two auxiliary seawater pumps (one standby), one seachest, ~~one duplex strainer,~~ and one overboard discharge to port must be provided. [NECP 001] Recirculation lines for the pumps must be provided.

524b. Washdown System

A seawater washdown system must be provided. Washdown hose, hose bibbs and stowage reels must be provided in the Fish Laboratory, Wet Laboratory, the Aft Working Deck, at the Side Sampling Station and at the top of the trawl ramp. Hose must be 19 mm diameter, rubber inserted, non-collapsible neoprene or rubber hose. Hose bibbs and hoses must be located to reach all areas of the associated space. The washdown system pump must be provided with a recirculation line sized for a minimum of 10 percent of the pump rating.

The system must be sized to deliver 275 kPa at each hose nozzle, and configured to permit remote operation of the pump from the Wet Laboratory. System piping in the weather must be configured to permit draining to avoid freezing.

524c. Egg Sampling System

[ECP 0002F]An egg sampling system must be provided. The system must consist of a sea suction, intake piping, pump with isolation valves, piping to the Wet Laboratory, foundation, electrical service, isolation valves, discharge piping, and an Ocean Instruments, Inc. Inboard Continuous Underway Fish Egg Sampler (CUFES) with flow meter.

The sea suction must be located on the starboard side in the Main Machinery Space, 3000 mm below the design waterline. Sea suction piping must be approximately 150 mm in diameter, with no sea chest at the shell. The shell penetration edges must be well rounded.

The pump must be a vortex type such as **Pumpex Model KL84-T**, configured to minimize damage to fish eggs, rated at 640 l/min. Flow must be variable from 500 l/min to the maximum. Pump discharge piping must be approximately 75 mm in diameter. Discharge piping must be run to the Wet Laboratory to support the Ocean Instruments, Inc. Inboard CUFES. Discharge piping from the CUFES may be routed over the starboard side of the ship.

Pump local control must be provided at the EOS, with remote start and stop controls in the Wet Laboratory.

Piping must be Cu-Ni.

Data from the CUFES must be provided to the SCS.

Power for the CUFES must be provided from the Scientific Power System.

~~An egg sampling system must be provided. The system must consist of a sea suction, intake piping, pump with isolation valves, deaerating loop, piping to the Wet Laboratory, optical plankton counter with isolation valves, and discharge piping.~~

~~The sea suction must be located on the starboard side in the Main Machinery Space, 3000 mm below the design waterline. Sea suction piping must be approximately 150 mm in diameter, with no sea chest at the shell. The shell penetration edges must be well rounded.~~

~~The pump must be a vortex type such as **Pumpex Model KL84-T**, configured to minimize damage to fish eggs, rated at 640 l/min. Flow must be variable from 500 l/min to the maximum. Pump discharge piping must be approximately 75 mm in diameter and must include a deaerating loop. Discharge piping must be run to the Wet Laboratory to an optical plankton counter to be installed by the Government. Discharge piping from the optical plankton counter may be routed over the starboard side of the ship.~~

~~Pump local control must be provided at the EOS, with remote stop control in the Wet Laboratory.~~

~~Piping must be Cu-Ni.~~

~~Data from the optical plankton counter must be provided to the SCS.~~

~~Power for the Egg Sampling System optical plankton counter must be provided from the Scientific Power System.~~[ECP 0002F]

524d. Scientific Seawater System

A scientific seawater system must be provided to supply the temperature sensor, fluorometer, thermosalinograph, flow meter and particle counter required in Section 493. The scientific seawater system must also serve sinks located in the Wet Laboratory, Controlled Environment Room, Chemistry Laboratory and Dry Laboratory. A scientific seawater system connection must be provided at the van site. The system must consist of two dedicated sea suctions, non-metallic suction strainers with 4.75 mm perforations, two non-metallic seawater

pumps, flow control fittings, deaerating loop and distribution piping. The piping system, including piping, components and fittings, must be in accordance with Section 505.

[ECP 0025]The sea chests for the scientific seawater system suction must be located ~~in the~~ forward ~~end of the Bow Thruster Machinery Room~~in the ship. One uncontaminated seawater suction must be located on the starboard side approximately 2000 mm below the light ship waterline. The other must be located near the keel. Both sea chests must be epoxy coated. A three-way valve must be provided to select between the sea suctions. Globe valves must be used as main sea chest valves. A flush mounted, epoxy coated strainer plate must be provided at each sea suction shell connection.

The nonmetallic seawater pumps must be connected in parallel, rated at no less than 100 l/min each, and must supply seawater to the most remote service at approximately 70 kPa. The pump casings must be polypropylene. A three-way valve must be provided to select between the pump suctions.

Local pump start/stop controls must be provided in the EOS. Remote pump start/stop controls and running indication must be provided in the Chemistry Laboratory.

[ECP 0027] An overboard bleed line with an automatic pressure control device must be provided downstream of the last scientific ~~user~~ instrument ~~with an automatic pressure control valve~~ to maintain a constant system velocity ~~at no less than 2.4 m/s~~.[ECP 0027] The system must have complete drain down capability.

A branch line from the potable water system, with check valve and vacuum breaker/backflow preventer must be provided for backflushing of the scientific seawater sampling system.

528 PLUMBING, DECK DRAINS AND VENTS

528a. General Requirements

Deck drains must be provided to prevent accumulation of water on weather decks, decks of sanitary spaces, commissary spaces, food service spaces, Trash Room, Dive Locker, Fish Laboratory, Wet Laboratory, Controlled Environment Room, Hydrographic Laboratory, Fisherman's Ready Room, Laundry, and other wet areas and spaces.

One laboratory drain must be installed for every 10 m^2 of deck area.

[ECP 0031]Waste water collection systems, with the exception of weather deck drains, must be in accordance with Section 583~~provided with means for direct overboard discharge, and for gravity or vacuum collection in the waste water holding tank. Where overboard gravity drainage is not possible, vacuum inlet valves must be installed to allow waste water to enter the sewage system~~.[ECP 0031]

Wet Laboratory sinks must be provided with the capability to discharge either to the normal waste water collection system or by gravity directly overboard. Selection of the drain discharge must be accomplished with a lever-actuated Y-valve where the NORMAL flow position is to the drain collection system. The ALTERNATE flow position must be directed for gravity discharge overboard and must be available only by unlocking a locked valve position.

Chemistry Laboratory sink drains, including sinks in fume hoods, must be provided with a three-way valve to allow discharge either to the normal waste water collection system or to a separate 19-liter drainage bucket.

528b. Weather Deck Drains

Deck drains must be fitted at the edge of all weather decks and at the head of inclined and vertical ladders.

Hatchway trough drains must be sized and located to prevent the overflow of liquids into hatches, and must be installed to discharge directly overboard. Weather deck drains must be at least 50 mm nominal pipe, sized to accommodate accumulated flow from cascading drains.

528c. Traps and Cleanouts

Cleanouts must be installed in accessible locations. Cleanouts in the overhead of living spaces, food preparation and service areas, passageways, and offices must be avoided. When cleanouts in the overhead of such spaces cannot be avoided, the cleanouts must include a full sized ball or plug cutout valve, or be extended to the deck above.

Cleanouts may not be installed in laboratories or the Hospital.

Cleanouts must be installed in horizontal drain piping at each change of direction greater than 45 degrees and not more than 15 m apart. [NECP 001]Cleanouts must be installed ~~so that the cleanout opens in a direction opposite~~ to allow rodding toward the direction of the flow of the drainage. For piping up to 50 mm nominal pipe size maximum, cleanouts must be 38 mm nominal pipe size. For piping larger than 50 mm nominal pipe size, cleanouts must be 64 mm nominal pipe size. ~~Cleanouts must be equipped with~~Two cleanout fittings for temporary installation must be provided and must have male hose threads and caps for ~~firemain~~ attachment of a flushing hose. [NECP 001] A minimum of 500 mm clearance for rodding must be provided for drains 75 mm nominal pipe size and larger. Cleanouts for smaller drains must be installed with a minimum of 300 mm clearance for rodding.

528d. Plumbing Drains and Vents

Plumbing drains must be provided for all required fixtures. All plumbing drains must be provided with traps and cleanouts. Drains from lavatories, drinking fountains, sinks, and other plumbing fixtures must be vented. Trap seals of fixtures and deck drains must be protected from siphonage or backpressure. Vents terminating in the weather must be installed to ensure that no trap seal is subject to overpressure.

529 BILGE AND BALLAST SYSTEMS

The bilge drainage system and the ballasting/deballasting system must be in accordance with Section 073.

529a. Bilge Drainage

A bilge drainage system must be provided in accordance with regulatory body requirements.

529b. Ballasting/Deballasting

A segregated ballast system must be provided and configured for ballasting and deballasting tanks separately or simultaneously.

531 DISTILLATION

The distillation system must be in accordance with Section 073.

Fresh water must be generated for the ship for potable water service and other fresh water users by two distillation units such as **Alfa-Laval JWP-16-C40**, with a rated capacity of 7.0 m^3 per day. Units must include brine/air ejectors and ejector pumps, and fresh water discharge pumps. The heating medium must be the diesel engine jacket water cooling system, as described in Section 532. Supplemental electric heaters must be provided if necessary to maintain distiller output of 5.0 m^3 per day, each, with the electric plant operating at 25% of rated capacity.

A diverter valve controlled by the distiller salinity indicators must be provided downstream of each distillation unit for dumping of fresh water to the bilge or to the waste water holding tank when the salinity level is exceeded.

The fresh water discharge pumps supplied with the distillers must discharge to the fresh water tanks.

532 FRESH WATER COOLING SYSTEMS

Fresh water cooling systems must be in accordance with Section 073.

Diesel engine jacket water cooling systems must be provided as required by Section 256.

The fresh water in the fresh water cooling systems must be cooled via heat exchangers in the main seawater cooling system as described in Section 256.

533 POTABLE WATER SYSTEM

The potable water system must be in accordance with Section 073.

533a. General

The potable water system must provide fresh potable water to the Galley, Laundry, accommodations, laboratories, and other fixtures and services as designated herein.

Vacuum breakers, air gaps, and backflow preventers must be utilized at pipe terminals, hose connections, and equipment and fixture installations as required to prevent potable water contamination. Makeup connections must include a locked closed cutout valve, vacuum breaker, and backflow preventer.

Piping and components upstream of the specified UV sterilizer must be designated for fresh water. Piping and components downstream of the sterilizer must be designated potable water. Piping downstream of vacuum breakers, air gaps, and backflow preventers must be labeled “CONTAMINATED FRESH WATER.” Potable water systems may not be run through bilges or tanks. The entire potable water system must be cleaned, disinfected, tested and certified clean prior to initial service.

533b. Potable Water Distribution

Two fresh water tanks must be provided. Pipe runs for other systems through fresh water tanks must be prohibited.

Two fresh water pumps (one standby) must be provided to distribute potable water to all users via the sterilizer and a loop or main, and to provide recirculation to the fresh water tanks. Pumps must be activated by compression tank pressure switches and must be provided with recirculation lines as required. A priming pump with automatic start and seal tank must be provided if fresh water tanks do not provide positive suction to the pumps.

Booster pumps and/or freestanding hydropneumatic compression tanks must be provided to maintain system pressure. Tanks must include pressure switch connections for pump

activation, local and remote pressure indication in the EOS, and a stop check valve or permanent connection for air charging. Oil-free air charging must be provided for compression tanks as specified in Section 551.

The potable water loop or main must be arranged to receive potable water from port and starboard shore connections and distribute water to the fresh water tanks and to fixtures and services throughout the ship. Shore connections must include flow and pressure indication and relief, backflow prevention, and drainage. Heat tape must be installed on piping exposed to the weather to prevent freezing.

533c. Hot Potable Water

At least two hot water heaters must be provided and served from the potable water main. The heaters must be of the quick recovery electric type and must supply hot water at 60 °C at a total capacity of 2.2 m^3 per day. Hot water must be distributed throughout the ship to all required fixtures and services via a recirculation loop or main. If a loop is provided, hot water must be delivered to the farthest users within 20 seconds, and circulation pumps must be provided to recirculate water back to the heaters for reheating. If a main is provided, heat tape must be utilized on dead leg piping to maintain water temperature at a minimum 49 °C.

533d. Disinfection and Filtration

One ultraviolet sterilizer such as **Aquafine RBE-4R**, with 9,000 L/h capacity must be provided downstream of the fresh water pumps. Unit must include a sterilizing chamber with UV lamps located in the Auxiliary Machinery Room and remote monitoring and control in the EOS. A chlorine injection system, capable of being fitted after the UV sterilizer, must be stored onboard.

Water filtration must be provided at point of use installations as required, such as beverage, laboratory and safety fixtures. Equipment whose water is heated or frozen must utilize filters with lime scale inhibition.

533e. Miscellaneous Services

A makeup connection must be provided for the fresh water cooling system in the Main Machinery Space.

A makeup connection must be provided for the jacket water cooling system in the Main Machinery Space.

A makeup connection must be provided for the chilled water system in the HVAC Machinery Room.

Potable water must be supplied to the Messroom [PA37]beverage dispenser via two check valves, and no copper, brass, or bronze piping, fittings, or valves must be utilized downstream of the check valves.

Potable water must be provided to the drinking water fountains required by Section 644.

Fresh water must be provided to the cable cleaning and lubrication systems at each hydrographic winch and the oceanographic winch. In addition, a fresh water hose bibb and hose reel must be provided in the Trawl Winch Room, with sufficient 19 mm hose to wash down each trawl winch cable drum. An adjustable nozzle must be provided at the end of the hose. Similar systems must be provided for the net sonde winch and the Trash Room.

[ECP 0008E]Fresh water hose bibbs must be provided to the 04 Level, accessible to the Marine Mammal Observation Stations, in the Dive Locker and at the anchor windlass.[ECP 0008E]

Hot and cold potable water hose bibbs must be provided at the van site and at the Side Sampling Station on the Main Deck.

Fresh water must be supplied to the window washing system via a compression tank, serving each window equipped with wipers at a minimum distribution rate of 5.0 l/min per m^2 of total window area serviced. The compression tank must include a fill connection via air gap and capability for adding antifreeze or other agents as required. Washing spray for each window must be controlled by pushbuttons adjacent to wiper controls.

534 MACHINERY AND COMPONENT DRAINS

Drainage must be collected from machinery and equipment in the main machinery spaces, Auxiliary Machinery Room, Bow Thruster Machinery Room, Trawl Winch Machinery Room and other spaces as required to prevent the accumulation of oil and water mixtures in the bilges. Drainage must be positive pitched and must be segregated to the waste water and oily waste systems, or to the bilge, as required. Deck coamings, drip pans, or funnels must be installed around or under components or equipment as required. Drains within the main machinery spaces or the Bow Thruster Machinery Room must drain to the oily waste system or to the bilge only.

541 FUEL FILL AND TRANSFER SYSTEM

The fuel system must be in accordance with Section 073.

541a. General

The fuel system must provide means for the following:

a. Purification of fuel via a self-cleaning purifier.
b. Stripping of fuel tanks.
c. Transferring of fuel between fuel storage, and service tanks.
d. Transferring of fuel to the service tanks serving the diesels via the self-cleaning purifier.
e. Off-loading.
f. Fueling the Rescue Boat and Workboat in their stowed positions.

541b. Fuel Tanks

[NECP 001]Filling and off-loading connections must be located on the Main Deck or 01 Level, and must terminate in shut off valves with caps and retaining chains. [NECP 001] A sampling connection must be provided on the tank drain line. One fuel storage tank must have space reserved for overflow purposes.

541c. Fuel Purifier

Two identical [PA38]self-cleaning centrifugal fuel oil purifiers must be provided for the fuel fill and transfer system. The purifiers must be sized so that only one is required to transfer fuel to the service tanks during normal operations.

551 COMPRESSED AIR SYSTEMS

Compressed air systems must be in accordance with Section 073.

551a. Ship Service and Starting Air

Two oil-free motor driven air compressors must be provided. [NECP 001]Compressors must be sized so that each is able to provide12 standard L/sec of ship service air at 860 kPa, in addition to any starting air requirements. [NECP 001] Air compressors must be of the rotary screw type, equipped for automatic loadless starting. In addition, compressors must be provided with automatic pressure operated control switches, check valves, pressure relief valves and stop valves. Each compressor must have the capability of filling the starting air receivers, if provided. The ship service air system must have an air receiver, moisture separator, piping valves, and other components, as required, to provide air at the required pressures and flows to connected services.

Ship service air, with 15 m of hose, end fitting, quick-disconnect valve and filter-regulator, must be installed in the following locations:

a. adjacent to the Aft Working Deck area near centerline,
b. at the Side Sampling Station on the Main Deck,
c. adjacent to the hydrographic winches on the 01 Level,
d. in each Laboratory,
e. the van site,
f. the ET Shop,
g. all Machinery spaces,
h. Engineer's Workshop,
i. Bosun's Locker,
j. two locations on the weather deck forward.

Compressed air outlets located in the weather must be enclosed in weatherproof enclosures.

551b. Scientific Air Services

A vacuum system capable of drawing a vacuum of 70 kPa of mercury at 0.0050 m^3/sec must be installed, with four console-mounted terminals in the Chemistry Laboratory, three terminals in the Dry Laboratory and one terminal in the Wet Laboratory. [ECP 0001G]In addition, an oil-free air supply capable of developing 690 kPa of pressure shall be provided in the Dry Laboratory, Wet Laboratory and Chemistry Laboratory. A compressed air outlet shall be provided adjacent to each vacuum outlet.[ECP 0001G]

551c. Diver's Air System

Space and weight must be provided for a diver's air system. The system will include one breathing air compressor, similar to MAKO Model AC105, a three bank DOT K bottle air storage system, and a fill station, similar to MAKO Model Open Fill Station. The compressor and components will be located in the Dive Locker and will supply air of Grade E quality in accordance with the Compressed Gas Association.

The compressor must be provided with suction from the weather in a location free from contamination and seawater spray.

555 FIRE EXTINGUISHING SYSTEMS

555a. Fixed Carbon Dioxide Fire Suppression System

Separate fixed carbon dioxide (CO_2) systems must be provided for the main machinery spaces, Emergency Diesel Generator Room, Trash Room, Paint Locker [PA39]and HAZMAT Stowage.

555b. Additional Services

At least one portable foam applicator unit, capable of connection to the firemain system, must be provided in each of the main machinery spaces and the Emergency Diesel Generator Room.

Means must be provided to secure ventilation to any space containing internal combustion engines, incinerator, or hazardous chemicals. Emergency shutdown of diesel engines, incinerator, fuel and oil pumps must be provided as required by the Regulatory Bodies.

Fire detection, fire alarms, portable extinguishing equipment, and fire control plans must be provided as required.

The ventilation hood over the deep fat fryer and other cooking equipment in the Galley must be fitted with fire suppression. Local and remote actuation must be provided.

556 HYDRAULIC POWER TRANSMISSION SYSTEMS

Hydraulic power transmission systems must be in accordance with Section 073.

556a. General

[NECP 001]Hydraulic power systems must use high pressure CRES piping, steel fittings and hoses, and must be designed for maximum working pressure of 210 bar or less. Hydraulic fittings in the weather must be wrapped with protective tape such as **DensoWrap**. [NECP 001] Systems and components must be designed for hydraulic shock pressures up to 150% of the operating pressure. System operating pressures for moderate sea working loads must be 175 bar maximum for design or selection of hydraulic actuators and drive components.

[NECP 001]Hydraulic power units must be sized to provide 110% fluid flow at maximum pressure as required to conduct full load operations of all associated system components ~~used in a combined evolution~~normally operated in the missions identified in Section 070. [NECP 001] Relief valves must be set at 110% of maximum system operating pressure, but may not exceed the design pressure.

Hydraulic rams and cylinders must be in accordance with ANSI B93.1, B93.2, B93.8, B93.15 or equivalent NFPA standards. Mounting accessories must conform to NFPA T3.6.8.

Selection of hydraulic system piping, fittings and related components must be in accordance with Section 505. Piping and piping components (valves, etc.) must be sized for a maximum flow velocity of 4.5 m/sec. Pipe bends or fittings for piping run direction change must be of 2 diameters minimum radius geometry to reduce noise.

Ample provision must be made in piping system arrangements, connections and hangers for expansion due to temperature and pressure changes and due to working of the hull using pipe bends or loops. Sliding or expansion joints may not be used.

Systems must have necessary pressure gauges and means for bleeding, draining and venting and replenishing with drains located at low locations and vents located as high as practical to avoid air pockets

To extent possible, systems must be designed so that pumps are started under no load conditions.

Cadmium plating may not be applied to any part of hydraulic equipment that may be in contact with hydraulic fluid.

556b. Hydraulic Fluid

Hydraulic fluids must be selected with consideration of the effects of viscosity within the range of operating temperatures and pressures. Wherever practicable, hydraulic fluids must be standardized for all hydraulic systems.

Petroleum based fluids are preferred and may be used in systems without accumulators or with accumulators where system pressure is less than 40 bar. Petroleum based fluids may also be used with accumulators that are nitrogen or spring loaded and less than 3.85 liters capacity in systems over 40 bar. In systems using larger accumulators over 40 bar, fire resistant fluid is required.

561 STEERING SYSTEM

The steering system must be in accordance with Section 073.

The steering system must be sized in accordance with regulatory requirements and the maneuvering requirements of Section 070. The steering gear must consist of a low pressure rotary vane hydraulic motor mounted directly on the rudder stock.

The steering system must be configured to accept control from the DPS.

562 RUDDER

A high-lift rudder such as **Becker trailing edge flap type** must be provided, sized to meet the maneuvering requirements of Section 070. The trailing edge of the rudder must be a minimum of 1000 mm forward of the aft end of the trawl ramp.

Rudder bearings must be of the self-lubricating, non-metallic type, **Thordon SXL**, or equal.

565 ROLL STABILIZATION TANK

565a. Design

A passive, free surface type roll stabilization tank must be provided. The tank must be sized to meet the seakeeping performance requirements of Section 070.

The tank structure must be built to ABS structural deep tank standards. Supporting structure must consider the dynamic loading and accelerations on and of the mass of the liquid in the tank. Supporting girders must be well bracketed to the local bulkheads being supported as well as to those that support the girder.

The tank must be model tested to determine the proper liquid levels for various roll periods and operating conditions. A report of these tests must be provided and must show the stabilized and unstabilized roll angles and lateral accelerations for the operating conditions called for in Section 070. Structural steel damping devices within the tank must be sized as determined by model tests of the tank to ensure a relatively flat roll response at all wavelengths with the tank operating.

Seawater fill lines must be provided and connected to the ballast pump. The tank must be drained through port and starboard dump valves and piping that are large enough to empty the tank from the highest operating level within 15 minutes. Dump valves must be controlled from the bridge. Vents may not be fitted with non-return devices and must be large enough to ensure free flow when dumping the tank. A sounding tube must be fitted at the center of the tank.

Instrumentation must be provided to enable the determination of the fluid level in the tank in a seaway. This must be done by taking the long term average of pressure transducers installed in the port and starboard wings of the tank. The instrument must provide an output signal proportional to the tank level to the MCS.

Acoustic treatment must be in accordance with Section 073. Tank coatings must be in accordance with Section 631, must be compatible with the tank fluid and must withstand high liquid velocities. Tanks and piping must be protected against freezing and build up of ice.

Operating instructions must be posted on the Bridge. These instructions must clearly indicate how to determine the proper level in the tank for the loading conditions and the effect of the tank on seakeeping and transverse stability.

565b. Technical Documentation

The following technical documentation must be prepared.

Model Test Report. – The Model Test Report must document the results of the roll stabilization tank tests.

568 BOW THRUSTER

A fully azimuthing jet-type bow thruster such as **Elliot Turbomachinery Ltd., White Gill Model 40T3S Vertical Shaft Unit,** must be provided. The thruster must be driven by an independent AC electric motor sized to meet the maneuvering requirements of Section 070.

The thruster motor must be controlled by a 12-pulse or 24-pulse variable speed controller, powered from the main switchboard bus via a shielded input isolation transformer. The power converter must be powered directly from the propulsion bus and must provide full speed control from zero to maximum r/min.

Thruster controls must accept both manual and DPS input. Thruster controls and indicators must be provided at the SCC, the port and starboard Bridge Control Stations, and the ACS.

570 *GENERAL REQUIREMENTS FOR HANDLING SYSTEMS*

Handling systems and associated equipment must be designed for satisfactory operation in specified environmental conditions under the range of weather and temperature conditions specified in Section 070. Systems must be designed in accordance with ABS requirements for cargo gear and API "Specification for Offshore Cranes" (API Specification 2C). Operating limits for handling systems design, except for the stores crane, are be 4.0 m waves and 35 knot winds. The stores crane must be designed for pier-side operation.

Handling system support structures, equipment and attachment points must be designed to withstand loads and forces as follows:

a. Combinations of loads and angles within the operating range which produce the maximum load in each component part.

b. Forces imposed by mass of components and gear, impact loading, sheave friction and stress in wire rope due to bending over sheaves.

c. Wind and ice loading, wave slap and effects of roll and pitch.

572 STORES HANDLING

572a. Stores Handling Crane

A crane shall be provided on the starboard side of the ship, located to load stores to the forward stores area. The crane must have a lifting capacity of 455 kg at 4500 mm over the side of the ship. The crane must have an attached power pack.

A foundation and electrical service must be provided to mount an identical crane forward on the port side of the ship.

572b. Monorail hoist

A 500 kg capacity manually operated monorail and hoist must be provided for lifting provisions from the forward Bosun's Storeroom on the Second Deck to the Main Deck. The section of the monorail over the Main Deck hatch must be hinged to swing clear of the 01 Level stores hatch when not in use.

581 ANCHOR STOWAGE AND HANDLING

Anchors, anchor stowage and an anchor handling system must be provided and installed in accordance with regulatory requirements and SNAME Technical and Research Bulletin No. 3-15, except that the anchor handling system must be sized for a vertical lift of 12 shots of chain.

A single electric anchor windlass must be provided to handle port and starboard anchors. [ECP 0008C]~~The anchor windlass must be capable of handling two sizes of chain with no mechanical adjustment to the windlass.~~ The windlass must be provided with capstan heads for warping. Controls must be mounted away from the anchor windlass on a separate stand on the foredeck, adjacent to the clutch and brake controls. The wildcat clutch bar must be secured in a bracket on the windlass. The windlass must be provided with a NEMA D high slip motor and an electric parking brake rated for 200 percent overload.

Unless additional chain is required by regulatory minimums, 12 shots of chain must be provided for the starboard anchor and ten shots of chain must be provided for the port anchor. ~~Two sizes of stud-link chain must be provided for each anchor cable. The outermost two shots must be Grade 1 size, Grade 2 strength chain, while the remaining~~ All shots of chain ~~required by ABS~~ must be Grade 3 chain. ~~Each cable must have a special adapting link to connect the two different sizes of chain. The adapting link must pass through the wildcat without interference.~~[ECP 0008C]

A chain locker sump must be provided, with means for drainage and cleanout.

582 MOORING AND TOWING FITTINGS

Cleats, bitts and chocks must be arranged to simplify handling arrangements and to clear interferences. The arrangement as well as the bitts and chocks must meet the requirements of the Panama Canal regulations. Rope scuttles and below-deck rope stowage must be provided fore and aft.

Bitts must be ASTM F915, Type II, Grade 2 or ASTM F938, Type II, Grade 2. Bitts must be sized to meet the Panama Canal regulations or must be in accordance with the ASTM recommended bitt size for the ABS recommended hawser, whichever gives the larger size.

Chocks must be ASTM F936, Type III or IV, Grade 2 and must be designed and sized to permit an eye splice or bight of line with two parts of the largest size line to be used with the chock, to pass through the opening.

Bitts and chocks must be fitted directly to the deck plating. On the Working Deck area, they must be bolted in place. Insert plates and stiffening of the deck must be provided as required to allow the fittings to develop the full strength called for in the ASTM standards. Chocks must be provided in bulwarks for proper line handling.

An electric drive capstan sized to handle the ABS recommended hawsers must be provided on each side of the aft Working Deck. Capstans must be self contained and located outboard of either side of the aft end of the trawlway so that they do not interfere with scientific missions operations.

The ABS recommended hawsers must be provided. Hawsers must be polyester.

Bolted fittings must be tested to a line pull of one and one-half times either the breaking strength of the hawser or the Panama Canal design load, whichever is greater.

583 BOATS, BOAT HANDLING AND STOWAGE

A SOLAS certified rescue boat and handling system must be provided. [NECP 001]The rescue boat must ~~have a minimum inside length of 5.1 m,~~be certified to carry at least seven persons, and have an inboard diesel engine and waterjet propulsion. [NECP 001]

Structural stiffening, deck space and electrical service must be provided for one workboat and davit system. This workboat and davit system will be loaded onboard by NOAA on a mission basis, and is part of the ship's itinerant load. The workboat will have a minimum length of 7.5 m, and will be similar to a Northwind Marine Model 2510 Defender[PA40]. The davit system will be similar to a Welin Lambie, Ltd. Model PIV 4.0.

Encapsulated liferafts and davits must be provided in accordance with regulatory requirements.

591 MISSION HANDLING SYSTEMS

591a. General

Mission handling equipment must be ABS certified. Cranes, A-frame and gantry must be offshore cranes in accordance with the ABS "Guide for Certification of Cranes" and entered into the Register of Lifting Appliances. The cranes must be in accordance with American Petroleum Institute "Specifications for Offshore Cranes" (API Specification 2C), and must be provided with the API Monogram. Engineering calculations and analyses must be conducted to determine ship motions and accelerations as necessary to determine loads and dynamic loading factors [PA41]for the certification process.

591b. Cranes

Aft Deck Cranes. - Two telescoping boom cranes such as **Appleton Marine, Inc. Model EB70-60-25** [PA42]must be provided for general coverage of the Aft Working Deck and 01 Level, over both sides and over the stern. Crane reach must be at least 2000 mm aft of the stern, 9100 mm over the respective side of the ship, and to the Side Sampling Station for the starboard crane. Each crane must have a dynamic lifting capacity as follows:

a. At least 3636 kg in 4.0 m waves and 35 knot winds, at any heading, at a radius of 6000 mm. The swing radius of the starboard crane must cross the centerline in this case[PA43].

b. At least 2100 kg in 2.5 m waves and 35 knot winds, at best heading, at any point on the Aft Working Deck forward of the top of the trawl ramp[PA44].

c. At least 1356 kg in 2.5 m waves and 35 knot winds, at best heading, 2000 mm aft of the stern.

d. At least 1588 kg in 2.5 m waves and 35 knot winds, at best heading, lifting from the surface of the water, 4000 mm from the side of the ship.

e. At least 3625 kg pierside, with no sea action, 35 knot winds, 9100 mm from the side of the ship.

In addition, the starboard crane must reach the center of Side Sampling Station with a lifting capacity of 750 kg in 2.5 m waves, 35 knot winds, best heading.

The cranes must include the following additional features to support the mission functions:

a. An insulated swivel sheave must be provided at the boom tip of each crane.

b. Each crane must be capable of continuous 360 degree rotation.

c. The whip of the cranes must be fitted for a single part operation only.

d. Each crane must be fitted with an anti-two-block feature.

The cranes must be mounted on fixed foundations configured to accept the maximum anticipated overturning load with a factor of safety of two.

Boom crutches must be furnished for stowing the cranes.

Controls for crane hoist, slew, extension, and topping must be provided at local control stands and at the Aft Control Station. Controls must be electric-over-hydraulic, and must include safety interlocks. The cranes must also be controlled locally through direct mechanical actuation of directional control valves mounted on the turret, convenient for use by the crane operator.

An integrated load limiting monitor must be provided for each crane, capable of being programmed for the dynamics of each type of lift scenario; at pierside, underway from deck to deck, and underway from the sea surface to the deck. Load limit alarms must be provided at the local and remote stations for each crane.

An electronic readout of hook load must be provided, with a calibrated meter at the door inside of the Fish Laboratory.

Stowage must be provided for crane hooks.

[NECP 001]With the crane booms in their stowed positions~~ pointing aft~~, the directional control valves, anti-two-block equipment, and load monitoring components must be mounted to the inboard side of each crane's boom. [NECP 001]

591c. Stern Equipment

Gantry. - A gantry (U-Frame) must be provided for handling scientific equipment over the stern. [ECP 0054] The gantry must have a lifting capacity of at least 3650 ~~5000~~ kg in 4.0 m waves and 35 knot winds throughout its range of motion. ABS certification must be based on handling 3650 kg in 4.0 m waves and 35 knot winds using wire rope with a breaking strength of 36.5 metric tons rigged to the net reel. For USCG Subchapter U certification, towing shall be based on wire with a breaking strength of 36.5 metric tons rigged to the net reel.[ECP 0054] The gantry must be centered over the trawl ramp and must have a minimum clear width throughout its height of 4100 mm, and a minimum clear height of 6800 mm from the underside of the sheave to fixed structure on deck at its midpoint of travel. The gantry must have a minimum clear height of 6000 mm between the underside of the counterbalanced blocks and the deck edge at the transom. The gantry must pivot on a transverse axis to permit the sheave to plumb a position from at least 2000 mm forward of the top of the trawl ramp to at least 3500 mm aft of the transom. The aft position must be the stowed position. In the full inboard position, the gantry crossbar must be no more than 2500 mm above the deck.

A clear width of at least 300 mm must be provided between the gantry and other structure. The clear height throughout this clear area, from the deck to any obstructions, including the stowed gantry or its actuating and support structure, must be at least 1800 mm.

The gantry must be provided with padeyes located at the centerline and at the quarter points of the cross member of the gantry. Counterbalanced blocks for handling cables from the oceanographic winch and other cables led to the gantry must be provided at the padeyes.

Structural stops must be provided in the aft position. Means to limit the inboard arc of travel of the gantry may not decrease useable deck space.

Design loads must be applied to any one of the sheaves, whichever produces the most severe loading. In all loading conditions, the load applied by the sheave to the gantry must be the vector sum of the loads in the two legs of the cable which passes over the sheave. The leg outboard of the sheave must be taken at any angle up to 30 degrees off the vertical, in any direction, except that, in the working position, the aft angle must be taken as any angle up to 45 degrees combined with a lateral angle of up to 30 degrees to either side. The yield stress of the material in the gantry, stops, hydraulic system and foundation must be at least 1.5 times the calculated stresses resulting from application of a load equal to the nominal breaking strength of the strongest wire to be used. The breaking strength of the wire must be used in determining the stresses in the gantry. The most severe case must govern.

The gantry must be hydraulically actuated. The gantry must stow outboard (aft) with the cylinders closed and the rods protected from the weather. [ECP 0054]The hydraulic cylinders must be capable of moving the gantry from the fully extended overboard position to a position centered 1.5 meters forward of the trawl ramp at the rated load in approximately 15 seconds~~through its arc of travel at 10 degrees/sec with a load equal to the breaking strength of the strongest wire applied at any sheave~~[ECP 0054]. Hydraulic controls must be provided locally in a position from which the operator will have a clear view of the trawl ramp, the gantry, the load supported throughout the arc of travel, and of the water surface at the stern of the ship. Remote controls must be provided at the ACS.

Gallows. - Fixed gallows must be provided for the trawl warp blocks and must be located aft, port and starboard. Trawl warp blocks must be provided, located and rigged for setting and retrieving doors off the stern, and must be located as far outboard as practicable without allowing the edge of trawl doors to project beyond the side of the hull at the transom when stowed. Trawl blocks must be sized for the trawl warp and must be located with the bottom of the blocks 2500 mm above the deck. The gallows must support the trawl blocks in positions which provide clearance for the trawl doors during rigging, stowage, deployment, and retrieval. The trawl warp

may not chafe on ship structure during trawling operations, with trawl warp angles of up to 45 degrees port and starboard with a 45 degree down angle. The gallows, trawl blocks, and supporting structure including the bulwarks must be designed to enable the trawl doors to be deployed and retrieved without the doors hanging up on ship structure.

The forces applied to the gallows, trawl blocks, fairlead blocks, and all supporting structure must be the vector sums of the forces in the wires passing over the sheaves. The forces in the wires must be taken equal to the breaking strength of the trawl warp. When loaded in this manner, the yield stress of the material in the structural elements must be at least 1.5 times the calculated stresses. The following conditions must be considered:

a. The trawl warp at any angle up to 45 degrees off the vertical aft combined with any transverse angle up to that which just clears the hull structure inboard, to an equal angle outboard.

b. The trawl warp vertical.

Trawl Ramp. - A trawl ramp must be provided as shown on the Guidance Documents. [ECP 0049]The wear surfaces of the trawl ramp must be made of abrasion resistant steel plating not less than ~~19~~ 12.7 mm thick.[ECP 0049]

The bottom edge of the trawl ramp and shell in the vicinity of the trawl ramp must be radiused a minimum of 175 mm to prevent snagging the net. The bottom of the ramp must be located at a height above baseline to keep the bottom edge of the ramp immersed in all conditions of loading that may occur during trawling. The ramp must have a slope no greater than 37 degrees from the horizontal. The clear width of the ramp must be 4000 mm. The ramp may not be sheathed.

A vertically retracting door and roller assembly must be provided across the top of the trawl ramp, configured to be flush with the trawlway surface in the lowered position, and perpendicular to the deck in the raised position. A transverse roller with a minimum diameter of 250 mm and a length of 4500 mm must be provided at the top of the retracting door. The top of the roller must be at the same height as the local bulwark in the raised position and below the trawlway surface in the lowered position. The door must be raised and lowered hydraulically, with a maximum cycle time of 15 seconds. The roller must be readily removable for maintenance. Controls for the vertical door shall be located at the ACS and at the gantry control location.

A bolted-on modified pipe section must be installed at the top aft end of the trawl ramp opening to restrain trawl wires during heavy seas. This pipe section must also be sized and shaped to act as a portion of the supporting structure for the trawl ramp cover system described herein.

A system of hinged steel decking and grating, with supporting structure as required, must be provided to cover the trawl ramp opening in the Main Deck. The cover system must be configured to withstand a concentrated equipment load of 2750 kg plus a 450 kg personnel load. The cover system must be constructed to permit installation and stowage in three meter seas. All lifting and rigging fittings on the cover system must be flush with the working surface. Removable lifelines and stanchions must be provided at the aft end of the cover system.

Trawlway. - The trawlway must be 4000 mm wide, and must have a minimum length of 14.3 m from the forward end of the trawl ramp. [ECP 0049]The wear surfaces of the trawlway must be made of abrasion resistant steel plating not less than ~~19~~ 13 mm thick, except that the aft-most three meters of the trawlway must be 19 mm thick plating.[ECP 0049] Removable aluminum trawl fences must be fabricated in 1800 mm lengths, flanged at the top and bottom, gussetted at

the outboard side only. The interior surfaces of the trawl fences must be smooth, with no protruding edges, corners, or fittings which could snag trawl nets. The segments must be bolted to the deck in a uniform bolt pattern of flush threaded sockets, so that there are no snagging points in the deck when sections of the trawl fence are removed. The fence segments must be fabricated with a vertical, enclosed slot 100 mm deep at their mid-length to accept nominal milled 4" x 8" wooden checkerboards. An equal number of trawl fence segments must be provided at 750 mm and 450 mm in height.

In addition, the forward half of the trawlway must be fitted with removable trawl fence sections, 750 mm high, along the longitudinal centerline of the trawlway. These trawl fence sections must have vertical enclosed slots for checkerboards on both sides, such that they can be aligned with corresponding slots on the outboard trawl fence sections.

10 wooden checkerboards must be provided; four sized for the full width of the trawlway, and the remaining six sized for the forward, half-width sections of the trawlway

Fish Sluice. – In a fashion similar to that of the trawlway, a fish sluice must be provided to direct and transport large numbers of fish from the trawlway overboard. The fish sluice must be installed transversely to the starboard side of the vessel, immediately aft of the Fish Laboratory. The fish sluice must be installed by removing the starboard trawlway fence segment located immediately aft of the Fish Laboratory. The fence segments used to fabricate the sluice must be 450 mm in height. Providing that there are no interferences along the after side of the bulkhead, the deckhouse may comprise a portion of the sluice. At the outboard end of the fish sluice in way of the outboard longitudinal passage, a hinged cover must be provided on the top of the sluice, fabricated from aluminum grating. Vertical sliding door panels must be installed in the bulwark and at the starboard trawlway fence, through which the dumping process may be controlled.

At the outboard side of the bulwark, a non-return pivoting gate must be provided to prevent boarding seas. The minimum clear dimensions of the fish sluice must be 1000 mm width and 450 mm height

The fish sluice must be provided with a supply of seawater at the rate of 500 liters/minute to assist in moving the fish. Two risers, valves and hoses must be provided at the Trawlway at the aft end of the Fish Laboratory.

Trawl Door Stowage. - The port and starboard bulwarks at the aft end of the Working Deck must be brought inboard to form trawl door stowage areas of approximately 3200 mm by 500 mm, as shown on the Guidance Documents. Cleats and staples must be provided as necessary to secure a trawl door in each area.

Resilient hard rubber fender pads must be provided horizontally along the outboard length of the recessed bulwarks, at or near the full bulwark height. The same material must be provided on the exposed deck on which the doors will land.

591d. Trawl Winches

Two, two-speed, autocompensating trawl winches, such as **Rapp-Hydema Model No. TWS-7551-36,35**, must be provided in the Trawl Winch Machinery Room. The trawl winches must each have a high speed first layer line pull of 23 mt at 65 m/min and a high speed final layer line pull of 7.5 mt at 190 m/min. Low speed first layer line pull must be 35 mt at 45 m/min. Low speed final layer line pull must be 11.5 mt at 120 m/min. [NECP 001]Each trawl winch must be provided with 4000 meters of 28.6 mm (1-1/8 inch) 6x37 GEIPS or swaged fiber core wire rope, lubricated with a petroleum based lubricant. [NECP 001] Trawl winch cables must be led to the trawl gallows using turning blocks with a minimum diameter of 1000 mm. Control for the trawl winches must be provided in the Trawl Winch Machinery Room, on the Aft Working Deck and at the ACS.

The openings in the Main Deck for the trawl warps must be as small as possible and at least 1000 mm above the height of the deck to minimize the potential for downflooding.

591e. Net Reel

A single split net reel, with each section capable of completely independent operation must be provided. Each section must have a net storage capacity of 10 m^3, and be rated for a bare drum pull of 9.0 mt at 40 m/min and 19.0 mt at 15 m/min. Inboard flanges of each section must be removable, and the sections must be capable of operation as a single net reel for use with large nets. A clear area must be provided 500 mm forward of the net reels and ship structure or other equipment. A clear area of at least 500 mm to the sides and above and below the drum flanges must be provided. Control for the net reel must be provided locally and at the ACS.

591f. Other Trawling Winches

Net Sonde Winch. - A constant tension net sonde winch such as **Rapp Hydema Model SOW-300-0,99** must be provided for the net sonde system. The net sonde winch must be equipped with a four-conductor slip ring unit such as **Meridian Laboratory Model MXO-4**[PA45]. The net sonde winch must be provided with 4000 m of 11.4 mm (0.450 inch) diameter torque balanced, double-armored coaxial electromechanical cable. Net sonde winch speed and power must be compatible with the trawl winches. The net sonde winch wire must be rigged overboard for proper fishing operations and in a manner that provides the wire manufacturer's minimum bend radius. Controls for the net sonde winch must be provided locally and at the ACS.

A display unit, **Measurement Technologies LCI-90**, or equal, must be provided for display of net sonde winch output tension, speed and line-count data. Signals must be provided by marinized optical encoders and load pins.

Outhaul Winch. - An outhaul winch such as **Pullmaster M12-3-97-1, or Gearmatic GH15-75/22029-01** must be provided. The winch must be provided with 110 m of 13 mm Spectra rope and outhaul hook. The outhaul winch must be mounted on the aft face of the gantry crossbar. Local controls must be collocated with gantry controls. Remote controls must be provided at the ACS.

Gilson Winch. - A Gilson winch such as **Rapp Hydema Model GWB-3500B - 13,15** must be provided. The winch must have a first layer line pull of 19.6 mt at 40 m/min. The Gilson winch must be provided with 250 m of 24 mm Spectra rope. Gilson winch local controls must be collocated with gantry controls. Remote controls must be provided at the ACS.

591g. Trawling System Hydraulic Power System

A dedicated hydraulic power system must be provided in the Trawl Winch Machinery Room. This system must supply the trawl winches, net reel, net sonde winch, outhaul winch, and Gilson winch, and must be in accordance with Section 556 and the recommendations of the Trawl Winch and Trawl Winch Control System manufacturer.

591h. Trawling System Controls

Trawl Winch Control System. - A trawl winch control system such as **Rapp-Hydema Model PTS Pentagon or Scantrol TC2000** must be provided at the ACS. All controls must be electric or electronic over hydraulic, so that hydraulic piping does not run through the deckhouse. The winch control system must be compatible with the trawl winches, provide display and control of winch operation, and include the following:

a. Control panel with digital readout of warp length, payin/payout speed and tension. Trawl warp length must be provided by direct measurement. Calculated length based on winch drum rotation is not acceptable.

b. Automatic and manual control and adjustment of winch operations, including automatic winch speed control and preset warp length feature.

c. Display, control, and alarms for winch machinery.

d. Graphic presentation of warp length, tension, payin/payout speed and alarms.

e. Automatic equalization of warps and trawl door position.

Winch control stations must be provided with station-in-control indication and control transfer acknowledgment.

Data input to the SCS must be provided.

591i. Oceanographic Winch

One electro-hydraulic oceanographic Traction Winch System must be provided, consisting of **Markey Machinery Co., Model DUTW-11 Traction Winder, Model DUSR-11 Storage Winch, and dedicated 112 kW AC/Hydraulic Power Unit**, or equal. [ECP 0006] [NECP 001]The Traction Winch System must be capable of handling a 5,000 meter working length of either 17 mm (0.680 inch) diameter electromechanical cable, 17 mm (0.681 inch) fiber-optic cable, and 16 mm (5/8 inch) diameter 3x19 torque balanced GEIPS ~~IWRC~~ rope. [NECP 001] Working length is defined as length outboard of the last block or sheave in the associated handling system, and is in addition to the length between that point and the winch drum, plus the manufacturer's recommended core wraps remaining on the winch drum.[ECP 0006]

The storage winch must be fitted with a four-conductor slip-ring unit such as **Meridian Laboratory Model MXO-4**, [PA46]with Burton marine connector. Cable passthrough, armor clamping, and conductor access into the hollow main shaft must be provided. The winch must accommodate a future fiber optic slip ring assembly.

A 1219 mm auxiliary pivoting sheave must be provided above and forward of the net reel, in direct line with the traction winder output. A tension-sensing output load cell and speed sensors must be incorporated into the auxiliary pivoting sheave. The wire entry point to this sheave may not change position as the sheave pivots to serve alternative overboard locations. In addition, a 2000 mm circumference counterbalanced overboard sheave must be provided on the stern gantry.

[ECP 0006]The oceanographic winch must be provided with ~~3,500~~ 5,000 meters working length of 16 mm (5/8 inch) diameter 3 x 19 wire rope and matching Lebus grooved shell. [ECP 0006]

An automatic cable washing and lubrication system must be provided for the oceanographic winch. [NECP 001] Lubricant for the system must be similar to **Grignare Co. PreLube 19**. [NECP 001]

591j. Hydrographic Winches

Two hydrographic winches, **Markey Machinery Company, type DESH-6 (electric),** or equal, must be provided in the Side Sampling Station

Each hydrographic winch must be equipped with 3,500 meters of 9.5 mm (0.375 inch) doubleserved strength member, single conductor, electromechanical cable such as Rochester Corp. type A216375[PA47]. A Lebus shell and **Markey** chain driven diamond drive level-winding system must be provided for each winch.

A four-conductor slip ring unit such as **Meridian Laboratory, Model MXO-4**[PA48] must be installed on each winch. The hydrographic winches must be provided with three-sheave fairlead heads with sensors to provide signals for line speed, tension, and line out. The fairlead head must support a 1000 mm circumference measuring sheave, two guide sheaves and adjustable front guide rollers. The fairlead head must be capable of adjustment of ±15 degrees from horizontal.

An automatic cable washing and lubrication system must be provided for each hydrographic winch. [NECP 001] Lubricant for the system must be similar to **Grignare Co. PreLube 19**. [NECP 001]

591k. Drop Target Strength Winch

Space and weight for a drop target strength winch must be provided at the Side Sampling Station. The winch will be similar to a **Markey Machinery Company Model DESF-11**, with a 22.5 kW, variable frequency AC drive motor and dynamic braking, sized for 400 m of 17 mm (0.680 inch) electromechanical cable.

Control of the drop target strength winch will be at the Side Sampling Station Control Booth and at the starboard Bridge Control Station.

591l. Oceanographic and Hydrographic Winch Controls

Oceanographic winch control must be provided locally and at the ACS, with speed and direction via electric lever unit. Storage Winch tension must be adjusted and displayed within the main control panel module.

The hydrographic winches and the drop target strength winch must be provided with operating controls at the Side Sampling Station Control Booth and at the starboard Bridge control console. Winch operating controls must include a main electric control lever, remote torque limit adjustment control, main loop ammeter, and emergency STOP button. Pneumatic operating valves and station selector valves must be provided for brake operation.

Two display units, **Measurement Technology NW LCI-90**, or equal, must be provided for display of oceanographic winch output tension, speed and line-count data. In addition, a wire angle sensor must provide a signal proportional to wire angle over the overboard sheave. Sensor output must be provided to the winch display units.

One display unit must be located adjacent to the winch, and the second must be located at the ACS. The local unit must be set up as the "master". The system must have a variable alarm setpoint for wire length deployed. A zeroing mechanism must be provided for wire length deployed. Signals must be provided by the marinized optical encoders and auxiliary pivoting sheave load pins.

The display units must output data for all parameters to the SCS.

Two display units, **Measurement Technology NW LCI-90**, or equal, must be provided for display of each hydrographic winch output tension, speed and line-count data. In addition, a wire angle sensor must provide a signal proportional to wire angle over the overboard sheave for each winch. Sensor output must be provided to the winch display units.

One display unit must be located at the Side Sampling Station Control Booth, and the second must be located at the starboard Bridge control console. The local units must be set up as

the master units. The system must have a variable alarm setpoint for wire length deployed. A zeroing mechanism must be provided for wire length deployed. Signals must be provided by the marinized optical encoders and fairlead head sheave load pins.

The display units must output data for all parameters to the SCS.

Power for the winch monitoring systems must be provided from the Scientific Power System.

591m. Side Sampling Station Handling Gear

A hydraulically operated A-frame must be provided on the starboard side, configured to span the length of the Side Sampling Station. The A-frame must be rated to handle an instrument with a water weight of 910 kg plus 3,500 m of the heaviest wire suspended in the water. The A-frame must also have a towing capability of 13.25 kN at angles of up to 45 degrees from vertical, including surge loads due to sea and vessel action. All loads must be determined using the operating environment specified in Section 570.

The A-frame must have a clear vertical height over the Main Deck of at least 7000 mm, a clear width at the top of 5600 mm, and a minimum outboard reach of 3000 mm past the edge of the Main Deck. The A-frame must rotate from full inboard to full outboard in less than 30 seconds.

The A-frame must be provided with a hydraulic power pack and control system. The power pack must be installed in a protected location adjacent to the A-frame. The controls must be located in the Side Sampling Station Control Booth, and configured to provide the operator with an unobstructed view of the launch and recovery of equipment.

[NECP 001] ~~Three sets of flag blocks must be provided at the Side Sampling Station, located to direct wire from the hydrographic winches and the drop target strength winch to the A-frame. Size and positioning of the flag blocks must be in accordance with the winch manufacturer's recommendations.~~

Three, 1500 mm circumference counterbalanced overboard sheaves must be provided on the A-frame. One hydrographic winch ~~and its associated flag blocks~~ must be configured to serve the stern gantry. [NECP 001]

A 1000 mm wide by 3600 mm long platform must be provided, hinged at the Main Deck edge outboard of the Side Sampling Station, configured to be rotated outboard to a horizontal position to provide access to overboard lines and equipment. The platform must be constructed in two sections, each with a frame and grating capable of supporting a load of 1375 kg in a seaway.

591n. Catch Handling Equipment

General. - Working deck equipment must be provided to facilitate movement of scientific specimens from the trawlway into the Fish Laboratory, and then to the Wet Laboratory.

Pre-Sort Table. - The Pre-Sort Table must be a minimum of 1500 mm long, 3000 mm wide and 385 mm deep, elevated to a height slightly above the Sorting Table in the Fish Laboratory, and located directly aft of the Fish Laboratory. The Pre-Sort Table must be fabricated from marine grade aluminum, and capable of holding 4550 kg of fish plus the dynamic loading of the vessel's accelerations. The Pre-Sort Table must be constructed with the forward side hinged on the exterior of the aft bulkhead of the Fish Laboratory. The after side of the table must be fitted with a bridle to allow lifting by the starboard crane, to initiate the flow of fish forward into the Fish Laboratory. The hinged connection must be fabricated so the table may be raised to the vertical, to allow cleaning beneath. The sides of the Pre-Sort Table must be constructed of removable wood planks mounted in aluminum frames and channels. Removable side panel(s) must be

provided directly above the Fish Sluice, on the outboard side of the table, to allow immediate dumping overboard of fish. Provision must be made for the rapid drainage of water.

Lifting eyes must be provided at the four corners for lifting the empty Pre-Sort Table by means of slings or bridles. The eyes must be shaped and arranged so that they will not be a hazard to personnel.

The Pre-Sort Table must be secured to the deck utilizing the deck bolt grid pattern. The hold down mechanism must be self-locating and positively secured with toggles.

Pass-Through. – An opening must be provided in the aft bulkhead of the Fish Laboratory, 750 mm square, arranged to freely pass fish from the Pre-Sort Table onto the Sorting Table. The pass-through must be located outboard as far as practical to allow the shortest transit to the longitudinal sorting table section. The pass-through must be equipped with a mechanically operated, sliding weather tight guillotine door.

Sorting Table. – A sorting table must be provided in the Fish Laboratory. The table must extend across the aft bulkhead and then 7700 mm forward along the outboard bulkhead. [ECP 0001C]The table must be 760 mm wide and 750 mm high, and must have ~~385~~ 350 mm high sides. ~~The top edge of the sides must be 1170 mm off the deck.~~ THIS CHANGE IS APPLICABLE TO SHIP 1 ONLY. [ECP 0001C] The table must be constructed so that it will stand level when mounted on the deck. The table surface must be flat. Exposed edges must be rounded, and the intersection of the transverse section and the longitudinal section must be eased with a 45 degree chamfer of approximately 300 mm.

The sorting table must be constructed of CRES. Drains and piping must be provided to direct the accumulation of water on the table to deck drains in the Fish Laboratory at the ends and at two additional locations along the length. These drain points must have expanded metal strainer plates with holes no larger than 15 mm. The sides of the table must be removable in sections for cleaning, each of which can be lifted by one person.

The structural design pressure for the sorting table, including an allowance for accelerations, must be 27 kPa to be applied over the bottom, sides and ends. The supporting structure below the table must provide for the storage of full, 20-liter buckets of liquid on shelving the entire length of the table, including lee rails to prevent movement during vessel operation. The table must be permanently secured to ship structure.

As part of the washdown system required in Section 524b, a salt water washdown header must be provided in the overhead along the entire length of the Sorting Table, extending to the forward bulkhead of the space. Six hose drops with scullery-style spray roses and holdback hooks must be provided along the run. The bulkheads of the Fish Laboratory and Wet Laboratory [PA49]must be sheathed with CRES, extending from the deck to the overhead. All seams and edges of this sheathing must be caulked to prevent water damage.

Hopper and Overboard Sluice. – A hopper and overboard sluice must be provided to direct and transport fish from the Fish Laboratory and Wet Laboratory overboard. The hopper and overboard sluice must be installed transversely on the starboard side of the vessel, at the forward end of the Sorting Table in the Fish Laboratory.

The hopper must be configured to allow fish from the Sorting Table and from the digital scales to be directed to the overboard sluice without lifting the fish. [ECP 0001D]~~The overboard sluice must consist of 450 mm high fence segments along the deck, similar to those provided for the Fish Sluice.~~ [ECP 0001D] A hinged cover must be provided on the top of the overboard sluice, fabricated from aluminum grating.

At the outboard side of the Fish Laboratory bulkhead and at the outboard side of the bulwark, non-return pivoting gates must be provided to prevent boarding seas. The minimum clear dimensions of the fish sluice must be 1000 mm width and 450 mm height

The overboard sluice must be provided with a supply of seawater at the rate of 150 liters/minute to assist in moving the fish.

Scales. - Space and weight for two motion compensated digital scales, similar to Marel Model M60, must be provided. The scales will be located forward of the Dumping Platform. [ECP 0001D]A platform ~~of a similar construction and width to the Sorting Table~~in accordance with Section 667 must be provided upon which to mount the scales. ~~The top of the scales must be at the same level as the working surface of the Dumping Platform. The table on which the scales are mounted must extend forward to the double deep sinks.~~ [ECP 0001D] Each scale must provide data output to the SCS.

Deep Sinks. – [ECP 0001D]Two CRES, hospital style, deep sinks must be provided ~~in the~~ forward ~~outboard corner of~~in the Wet Laboratory[ECP 0001D]. In addition to hot and cold potable water to each sink, seawater washdown service and uncontaminated seawater service must be provided.

Space Drainage. - In the outboard bulkhead of the Fish Laboratory and Wet Laboratory, at the deck level, pivoting washdown doors must be provided to allow drainage out of the spaces, while preventing a boarding sea from entering. The doors must be equipped with a cushion to prevent banging and a latch open and latch closed position.

591o. Laboratory Monorail/Hoist System

[ECP 0037]A ~~M~~monorail transfer system~~s~~ must be provided in the overhead of the Wet Laboratory and Hydrographic Laboratory, capable of handling and transferring scientific packages and equipment within the laboratory and out to the Side Sampling Station. ~~Each~~ The system must consist of a fixed monorail trolley track ~~and~~ with an electrically operated trolley hoist. ~~Each~~ The monorail track must extend from the center of the Side Sampling Station to ~~within one meter of~~ the center of the laboratories~~y~~. ~~A curved track section and associated guides must be provided to allow scientific packages to be moved up to 2 m port and starboard of the centerline of the laboratory. An additional, removable straight track extension~~A means must be provided to allow scientific packages to be moved through the exterior doors into the Side Sampling Station.

The trolley hoist must be configured to:

a. ~~for maximum possible~~ lift and move an instrument with a height of 1830 mm and a width of 1830 mm between the Side Sampling Station into the Hydrographic Laboratory,

b. lift and move an instrument with a height of approximately 1830 mm between the Side Sampling Station into the Wet Laboratory,

c. ~~and must be capable of~~ handle~~ing~~ a working load of 500 kg.

Limit switches must be installed to prevent two-blocking of the hoist~~ and to prevent the trolley from jamming against the end stops of the monorail~~.[ECP 0037]

591p. Technical Documentation

Cranes drawing review and surveys during construction must be conducted by ABS in accordance with ABS and API requirements. A certificate must be provided certifying that the equipment has been built and surveyed during construction in accordance with these requirements, describing the extent of testing witnessed, showing the model and serial number, a description of the equipment and date of issue.

Arrangement of Mission Equipment and Rigging. - The Contractor must prepare drawings showing the arrangement of equipment and rigging. Portable equipment and the deck socket grid pattern must be shown on each of the drawings.

The drawings must include separate rigging arrangements for trawling, over-the-side work (including cranes and A-frame operation), oceanographic, hydrographic and drop target strength winch operations, MOCNESS tows and boat handling. In addition, rigging arrangement drawings showing the van stowage location must be prepared. Calculations and stress diagrams for weight handling equipment must be provided with each drawing.

Cable Data. - Cable data must be prepared for each reel of cable provided. The cable data must be based on vendor test of the cable and include the following information as a minimum:

a. Cable sectional drawing and description of construction.
b. Nominal electrical and mechanical parameters.
c. Electrical data for each conductor.
d. Mechanical data.
e. Date of manufacture.
f. Summary and plots of torque, elongation, and rotation results including:

    1. Cable breaking strength.
    2. Cable elongation vs. tension.
    3. Cable rotation vs. tension.

g. Theoretical cable performance for each layer, conductor, armor, and jacket including:

    1. Layer designation.
    2. Number of wires.
    3. Wire diameter.
    4. Layer outside diameter.
    5. Lay length.
    6. Lay direction.
    7. Tensile modulus.
    8. Ultimate stress.

9. Yield stress.
10. Shear modulus.
11. Thermal expansion coefficient.
12. Specific gravity.
13. Other cable descriptive data as appropriate.

h. Results of tests tabulated through a range of tensions.

593 POLLUTION CONTROL SYSTEMS

Pollution control systems must be in accordance with Section 073.

593a. Waste Water System

[ECP 0031]Waste from laundry equipment, sinks, showers, lavatories, other similar fixtures, and from the deck drains specified in Section 528 must be drained to the ~~waste water system. Waste drains must be connected by a common main that must convey to the waste water holding tank.~~vacuum-driven sewage system.

Treated effluent from the marine sanitation device must ~~also~~ be discharged to the waste water holding tank. The waste water holding tank must be capable of holding waste water and treated effluent generated over a 72-hour period. The tank must be drained by a waste water discharge pump. The discharge line from the pump must contain a diverter valve which must allow selective discharge to an overboard discharge to port, or to port and starboard shore connections on the Main Deck.

593b. Sewage Systems

Waste generated from the ship's toilets~~, showers, sinks and garbage grinders~~ must be drained to the vacuum-driven sewage system. Toilets and vacuum interface valve assemblies for the fixtures must be provided.

Sewage and waste water drains must be connected by a common main with a diverter valve. The diverter valve must allow selective discharge ~~to the sewage media tank~~ via a vacuum system ejector(s) for processing by the marine sanitation device (MSD), or to an auxiliary seawater-driven eductor. The diverter valve must be located downstream of the eductor and must allow selective discharge to an emergency port side overboard discharge, or to a shore connection on the Main Deck. The MSD must be sized to process sewage and waste water generated within a 24 hour period, and its discharge pump must discharge treated effluent to the waste water holding tank.

The MSD must be a Type II system certified by the USCG~~, such as **FAST System, M Series, Model M-4**, employing an aerobic biological process, and must be of a modular design~~. The MSD must ~~include a media tank for processing and a contact tank (wet well) for treatment. A bulkhead-mounted tablet chlorinator, discharge pump, and automatic water makeup must be provided~~be capable of operation in brackish and fresh water.

~~The media tank must be modified by the manufacturer as required to include ejector(s) at the sewage inlet. The ejector(s) must draw sewage from the sewage main and must be capable~~

~~of drawing a vacuum of 50 kPa at the media tank and 38 kPa at the toilets. The sewage main must be provided with a vacuum gauge.~~

Tank ventilation in the weather must be located such that observers at the Marine Mammal Observation Station will not be affected by ~~aerobic~~ MSD process fumes.

A coaming must be provided around all sewage treatment equipment. A sump must be provided within the coaming for drainage collection via the bilge system in Section 529. A service sink in accordance with Section 644 must be provided in the Sewage Treatment Room, and must drain to the sump.

A ventilation failure alarm and a hydrogen sulfide indication alarm must be provided for the exhaust ventilation system serving the Sewage Treatment Room.

The drain for the in-sink garbage grinder required by Section 651 must be configured such that its discharge is routed directly overboard during normal operation and to the vacuum collection system during periods of zero discharge via a full pipe diameter two-way diverter valve. A removable strainer plate or basket with retaining device must be provided for the sink drain for use during periods of zero discharge. A sign must be provided at the garbage grinder, reading as follows:

DO NOT OPERATE GARBAGE GRINDER

DURING ZERO DISCHARGE PERIODS

A grease trap must be provided for all galley sinks. The grease trap shall be in accordance with the MSD manufacturer's recommendations.[ECP 0031]

[ECP 0024] An eye/face wash fountain must be provided in the Sewage Treatment Room, located as near as practicable to the exit from the space. [ECP 0024]

593c. Oily Waste System

An oily waste system must be provided which must include an oily waste transfer pump, oily waste holding tank, oily water separator, and waste oil tank. The oily waste transfer pump must permit selective suction from the oily waste holding tank or the Bow Thruster Machinery Room, Main Machinery Space and Auxiliary Machinery Room bilge wells via the bilge system.

An oily water separator such as **World Water Systems, Inc., "Heli-Sep" Model 500**, with rotating oleophylic separating fibers and polishing pack, automatic operation, 15 ppm oil content monitor and alarm, and separator pump must be provided. The separator must have a capacity of 4 L/min and must take suction via the separator pump from the oily waste holding tank and bilge wells. The separator must discharge oil effluent to the waste oil tank. The separator pump must discharge water effluent selectively to the oily waste holding tank or overboard via an oil content monitor and diverter valve.

The oily waste transfer pump must discharge selectively to the oily waste holding tank, or overboard. The overboard connection utilized by the oily waste transfer pump and the separator pump must discharge to an overboard discharge or shore connection via a diverter valve which must be normally locked closed.

A waste oil tank must be provided, designed to accept waste from oil leaks and residues, including from tank drains, filters, greases and waste oil from the oily water separator. The tank

must be equipped with a circulation pump and electric heater. The circulation pump must discharge to either the incinerator or a shore connection via a diverter valve.

[ECP 0030]~~**593d. Trash Compactor and Trash Storage**~~

~~A trash compactor such as **Tech Oil Products, Inc., ENVIRO-PAK Model 950** must be provided in the Trash Room.~~

~~Compacted waste storage for a 40-day mission must be provided in the Trash Room.~~[ECP 0030]

593de. Incinerator

An incinerator such as **TeamTec AS, Type OG200** must be provided and located in the Trash Room, rated for burning paper products, plastics, galley, medical and scientific waste, including scientific preservatives, and waste oil. The unit must be constructed in accordance with ASTM Specification F1323, including appendices. The incinerator exhaust must include flue gas ducting from the exhaust to the weather, a flue gas fan, and a flue gas damper with automatic shutdown, and control panel. A spark arrester must be provided.

An emergency stop switch for the incinerator must be provided in the passage outside the Trash Room which must disconnect power to the incinerator, and shut down the waste oil tank circulation pump, incinerator flue gas damper, and supply ventilation for the Trash Room.

Storage for ash as required for compliance with MARPOL Annex V must be provided in the Trash Room.

==========

600 OUTFITTING GROUP

600a. Color Scheme

The Contractor must prepare a Color Coordination Manual for the ship. The color scheme must be approved by the ConRep prior to fabrication.

600b. Furniture Construction and Installation

Furniture, unless otherwise required, must be commercial marine furniture such as **Hopeman Brothers, Inc. or Jamestown Metal Marine Sales, Inc**.

Fixed furniture must be secured to decks or bulkheads and must be installed level with the baseline. Portable furniture and furnishings must be provided with fittings for securing in the stowed position. Portable chairs must be provided with lashing assembly and flush deck plate.

Inaccessible spaces in way of furniture and furnishings must be flashed.

Furniture must be of steel or aluminum construction, finished in baked enamel, fluidized epoxy, or chrome plated. Case good panels must be insulated with sound deadening material. Decorative metal trim and hardware must be CRES dull finish, white bronze satin finish, or aluminum anodized.

Drawers and doors must have positive means to prevent opening due to ship motions. Spring, bullet, magnetic, or bayonet catches may not be used. Furniture doors and drawers in berthing and office spaces must be fitted with key operated built-in locks.

Legs of portable furniture must be fitted with non-marking, non-skid neoprene glides retained in CRES cups.

End table and coffee table tops must be finished with high-pressure plastic laminate.

600c. Technical Documentation

A color coordination manual must be prepared. The manual must include the color schemes for living, messing, office, conference room and laboratory spaces.

602 HULL DESIGNATION AND MARKING

602a. General

Label plates must be plastic, metal photo, or engraved on metal. Label plates for any specific purpose must be uniform in size, of the same material and with the same style lettering. Each label must be clear and concise with a minimum of abbreviations with a symmetrical and well-balanced arrangement of letters and lines.

Corrosion resistance commercial label plates, provided by the equipment manufacturer, are acceptable providing they furnish the required information. Commercial label plates that are deficient in any portion may be used if augmented by Contractor provided label plates containing the necessary information.

Label plates must be located to ensure visibility and may not be located where they can be obscured by furniture, pipes, or other fittings. All label plates must be attached with CRES screws or suitable marine adhesives. Aluminum plates must be insulated to prevent contact with dissimilar materials. Label plates in the weather or in areas exposed to seawater must be sealed to prevent seepage behind the plates. Where the use of a label plate will interfere with the use of

the labeled item, the labeling may be accomplished by painting the required wording in a color which contrasts with the surface color on, or adjacent to, the item.

In addition to label plates specifically required herein, other information required for the operation of the ship, such as the designation of stowage locations, lubrication instructions, warnings, and the designation of access panels must be provided.

602b. Warning, Caution, Operating and Instruction Plates

Warning, caution, operating and instruction plates must be inscribed with the following instructions, as applicable:

a. Safety precautions
b. Starting procedures
c. Operating instructions
d. Securing procedures
e. Emergency procedures

Warning, caution, operating and instruction plates must be provided for the following equipment:

a. Engines and generator sets
b. Propulsion machinery and switchgear
c. Bridge controls
d. Auxiliary machinery and equipment
e. Electronic equipment
f. Piping system controls
g. Shore power connection
h. Fire pumps
i. Steering gear
j. Workshop
k. Deck machinery
l. Wet Laboratory and Chemistry Laboratory sink drain flow control

602c. Space Labels

Space label plates must be at least 25 mm high with letters 13 mm high. Label plates must be provided for each door identifying the space within and for all hatches and manholes designating the compartment to which access is made.

602d. Deck Fitting Labels

Deck fitting labels must be CRES. Deck fitting labels indicating tested deck fitting working load must be provided attached to structure close to the fitting.

602e. Lifting Gear Labels

All rigging and lifting gear, including spares, must be marked with safe working load in accordance with regulatory requirements. The markings must be made in a conspicuous location in a durable manner.

602f. Anchor Chain Markings

The anchor chains must be painted and marked to identify the length of chain paid out as follows:

a. One link on each side of the 15 fathom detachable link must be painted white.
b. Two links on each side of the 30 fathom detachable link must be painted white.
c. Three links on each side of the 45 fathom detachable link must be painted white.

Marking must continue in this fashion to the bitter end of the chain.

Detachable links must be painted as follows:

a. 15 fathom detachable link, red.
b. 30 fathom detachable link, white.
c. 45 fathom detachable link, blue.
d. 60 fathom detachable link, red.

Subsequent detachable links must be painted in colors that continue this color sequence.

The first link at each side of the 15 fathom detachable link must have one turn of galvanized wire tightly wound around the stud. The second link at each side of the 30 fathom detachable link must have two turns of galvanized wire tightly wound around the stud. The third link at each side of the 45 fathom detachable link must have three turns of galvanized wire tightly wound around the stud. Wire marking must continue in this fashion to the bitter end of the chain.

602g. Historical Data Plate

A brass ship historical data plate with engraved upper case letters no less than 7 mm in height must be installed on the Bridge. The letters must be filled with black paint.

602h. Ship's Name

The word "NOAA" and the assigned NOAA hull number, in block letters, must be painted on both sides of the bow. The ship's name must be painted on each quarter. All letters must be outlined in continuous welds. [NECP 001]The height ~~of the bow letters must be 300 mm. The height of the name on the quarter must be 225 mm and the height of the hailing port numbers~~

~~must be 150 mm.~~and style of lettering must be in accordance with NC Instruction 9602A, dated 22 May 1992. [NECP 001]

602i. Name Boards

Ship's name boards, 400 mm high, must be provided port and starboard at the Bridge top and must be hardwood with the letters 280 mm high.

602j. NOAA Logo

The two-color NOAA logo must be painted on both sides of the bow. Templates for the logo will be provided by the ConRep.

603 DRAFT MARKS

603a. General

Draft marks must cover the draft of the ship under all probable conditions of loading and corresponding trims. The centerline of each set of draft marks must be in a plane perpendicular to the ship's centerline plane and to the molded baseline.

[NECP 001]Draft marks must be in block Arabic numerals, ~~150~~ 100 mm in vertical projected height, the bottom of each figure being the height in even increments above the reference plane. [NECP 001] Draft marks and load line markings must be painted figures outlined by weld bead, painted in a color contrasting with the hull.

603b. Calculative Draft Marks

Calculative draft marks must be located port and starboard, forward and aft. Forward and aft draft marks must be equidistant from the plimsoll marks and as far forward and aft as practicable. The reference plane for draft marks must be the molded baseline or baseline extended.

603c. Appendage Draft Marks

Appendage draft marks must be provided, port and starboard, above each appendage location. The letters PROJ must be provided in 150 mm high block letters, with the bottom 150 mm above the top of the uppermost draft marks.

603d. Other Hull Markings

Thruster marks must be provided port and starboard above the bow thruster location.

The locations and frame numbers of all major transverse bulkheads must be indicated port and starboard, in 150 mm high block letters.

Centerboard marks must be provided port and starboard above the longitudinal location of the centerboard. The reference plane for the centerboard must be the bottom of the centerboard when fully extended.

603e. Technical Documentation

A Draft Mark Survey Report must be prepared, documenting the as-built location of all draft marks and hull markings.

604 LOCKS, KEYS AND TAGS

604a. General

Locks and keys must be provided for closures (except for escape scuttles) providing access to the interior of the ship from the weather and for interior closures where required for security, such as storerooms, lockers, staterooms, laboratories, workshops and operating spaces. Escape scuttles must be provided with a latching device operable from below only.

604b. Locks

Joiner and non-tight doors must be fitted with built in mortise type locks, all made by one manufacturer. Doors in accommodation or working areas must be equipped with panic proof locks. Doors for public washrooms must be provided with a lock operated by thumb turn on the inside and by emergency key on the outside. Locking covers must be provided for thermostats in public spaces and laboratories.

604c. Padlocks

Padlocks must be 45 mm size, cylinder type with solid bronze casing or of the solid or laminated type with hardened brass or bronze shackles. Brass or bronze keep chains must be fitted to all padlocks. Hasps and staples must be welded and fitted so that when the closure is opened or closed padlocks cannot be caught between the closure and the frame.

All watertight doors, weathertight doors, hatches, manholes and scuttles to compartments used for stowage of equipment or stores must be provided with hasps, staples, and padlocks.

The gun locker must be secured with a high-security hasp and padlock, Type II MIL-P-43607D, NSN5340-00-799-8248, or MIL-P-43951, NSN 5340-00-799-8016.

604d. Keys

Each door lock must be provided with three keys. The keys to each lock must be different from the keys to other locks, except where there is more than one door into a single compartment, in which all doors to that compartment must be keyed alike.

Door locks and padlocks must be master keyed in the following groups according to their service:

D – Deck Department

E – Engine Department

S – Stewards Department

M – Mission Scientific or Scientist Spaces

N – Navigation Spaces

Three master keys must be provided for each of the groups and three grand master keys for all groups.

Keys must be numbered and have a tag of heavy fiber or plastic with the name of the department, space and ship inscribed thereon. A key tag index must be prepared.

A key cabinet must be provided in the Ship's Office.

604e. Technical Documentation

A key tag index book, in 3-ring binder format, must be prepared, identifying the key tag number, the key serial number, and the compartment or item secured by the key.

611 HULL FITTINGS

611a. General

Eyebolts, ringbolts, cleats, and other hull fittings necessary for the attachment, working, belaying, and securing of all parts and appliances must be provided. Sockets and supporting structure must be designed to safely withstand the largest load that can be applied to the eyebolt. [NECP 001]Sockets on the weather decks must be CRES ~~316~~. [NECP 001]

611b. Padeyes

Padeyes must be of steel and must be of strength to the purpose intended. Padeyes must be located and installed so that the load will be applied in the plane of the eye or must be designed for side loading when required by the handling arrangement. Padeyes must be load tested and labeled with the safe working load. Fittings must be tested to 200 percent of rated load without failure or deformation of adjacent structure.

Padeyes must be provided in number, location and capacity as necessary for convenient and rapid handling of stores and equipment to and from storerooms and stowage locations. Padeyes and lifting fittings must be provided over machinery as may be necessary for lifting parts of the machines and for transferring machinery parts to the Engineer's Workshop or out of the machinery space to the Aft Working Deck.

611c. Technical Documentation

A Hull Fitting Test Report must be provided, documenting load testing of each padeye.

612 LIFERAILS, LIFELINES AND STANCHIONS

612a. General

Railings, stanchions and associated fittings in exterior and utility spaces must be galvanized steel, except within 3000 mm of the compass, where they must be non-magnetic material.

612b. Liferails and Handrails

Liferails must be provided around all deck edges except where bulwarks are provided or where a clear deck edge is required for over the side handling or other operations. Liferails must meet all USCG requirements and must be in accordance with ISO 5480 "Shipbuilding - Guardrails for Cargo Ships."

Pipe handrails must be provided on each side of all inclined ladders.

612c. Lifelines

Removable stanchions and lifelines must be provided around all deck edges not protected by bulwarks or liferails. Lifelines must be three courses high of 12 mm diameter polymer jacketed Kelvin rope fitted with anodized aluminum end fittings, turnbuckles, and sister hooks. Removable

stanchions, where provided, must be spaced no further than 2500 mm apart. Stanchions must use bolt-down sockets with CRES 316 attachment fittings.

612d. Portable Guard Rails

Portable guard rails of 10 mm closed link chain and removable stanchions must be provided around all hatches which are flush or which have low coamings and elsewhere as necessary for protection of personnel.

612e. Storm Rails and Hand Grabs

Storm rails and hand grabs must be fitted to bulkheads in all interior and exterior passage areas, under Bridge windows, and elsewhere as necessary.

612f. Machinery Space Railings

Railings must be provided in machinery spaces as necessary for protection of personnel. Where necessary to facilitate access and removable of equipment, railings must be removable. Except in way of electrical equipment, such as switchboards, where non-conducting material must be used, railings must be 25 mm diameter galvanized steel pipe. Stanchions must be 30 mm diameter with a spacing not to exceed 1500 mm.

612g. Awning Frames

Awning frames must be of galvanized pipe, and must be complete with all hardware needed for awning installation.

An awning frame for a 3000 mm by 3000 mm awning must be provided for each Marine Mammal Observation Station.

613 FLAG HOISTS, FABRIC COVERS AND CURTAINS

613a. Covers

Covers must be provided for items of topside hardware requiring weather protection when not in use, such as signal searchlights, anchor windlass, winches and other deck machinery.

All covers must fit neatly, without wrinkles or pockets, and must be fitted with all hooks, lashings, thimbles, grommets, etc. necessary for complete installation. At locations of accelerated wear such as in way of sharp edges of machinery and equipment fittings, covers must be double canvas and provided with means for controlling wear such as internal padding. Covers of less than 1.0 m^2 must be fabricated of white commercial marine grade coated nylon cloth, 0.41 kg/m^2. Covers larger than 1.0 m^2 must be fabricated of white commercial marine grade coated nylon cloth, 0.50 kg/m^2. Each cover must have stenciled markings to indicate it use and location.

A storage bag of synthetic fabric, with stenciled identification markings, must be provided for each cover.

613b. Curtains

Curtains must be of synthetic material and must be lined and weighted. Curtains must be provided with tracks and all necessary hardware. Curtains must be provided for each fixed light, airport, and window in all staterooms, offices, the Messroom, lounge, and conference room. Curtains must overlap by at least 50 mm.

Blackout curtains must be black and must be fitted to exclude light emission into, or from, the space. They must slide to the open and closed positions and must be provided with straps to retain curtains in the open position. Blackout curtains must be provided between the Radio/Chart Area and the rest of the Bridge.

613c. Awnings

Awnings must be fabricated of white commercial marine grade coated nylon cloth, 0.61 kg/m^2. A 3000 mm by 3000 mm awning must be provided over each Marine Mammal Observation Station.

613d. Flag Hoists

Signal flag hoists and retrievers must be provided on the signal yardarms.

Flag hoists must be provided on the after part of the mast for the national ensign, on the jackstaff and on the ensign staff.

613e. Dressing Lines

Dressing lines must be rigged from the jackstaff to the masthead and to the ensign staff. Dressing lines must be equipped with sister hooks and swivels to prevent turns in the line.

Gantlines must be 50 to 75 percent of the breaking strength of the dressing lines.

621 NON-STRUCTURAL BULKHEADS AND PARTITIONS

621a. General

Where access is required for maintenance, inspection, repair, or operation, hinged and latched panels must be provided and labeled to indicate the item concealed.

Expanded metal and other non-structural bulkheads must be provided as required.

621b. Joiner Bulkheads and Linings

[NECP 001]Joiner bulkhead and lining panels must be either softcore or hardcore. Hardcore panels must be lightweight inorganic core, faced with decorative high pressure plastic laminate with a total thickness of 22 mm for bulkhead panels and 16 mm for lining panels. The plastic laminate must incorporate the final color. Softcore panels must be similar to those manufactured by **NORAC Marine Interior Systems**.[NECP 001]

Joiner bulkhead and lining panels surrounding spaces with terrazzo must be provided with 150 mm high CRES cove. Joints of panels in these spaces must be caulked.

In laboratories, linings must be installed between and flush with the Unistrut mounting channels provided on the bulkheads. Joints of panels in these spaces must be caulked. Ends of panels in these spaces must be sealed[PA50].

Joiner bulkheads and linings must be provided in the following spaces including linings on structural bulkheads:

a. Passageways in accommodations and laboratory areas

b. Staterooms

c. Offices
d. Hospital
e. Lounge
f. [PA51]Messroom
g. Conference Room
h. Bridge
i. Laboratories (except the Fish Laboratory and Wet Laboratory[PA52])
j. ET Shop

621c. Ceilings

Ceilings must be aluminum panels secured to a grid suspended from the overhead, with integrated lights, speakers and air terminals. In spaces requiring overhead absorptive treatment, the ceiling panels must be of the perforated type backed with acoustic absorptive insulation in accordance with Section 073.

Ceilings must be provided only in the following spaces:

a. Staterooms
b. Hospital
c. Lounge
d. Galley
e. Messroom
f. Conference Room

622 FLOORPLATES, HANDRAILS AND HANDGRABS

622a. Floor Plates

Machinery space floor plates must be diamond pattern steel or aluminum plates secured with CRES machine screws. Floor plates must be no larger in size than can be conveniently handled by one person and must each weigh less than 33 kg. Hinged portable plates must be provided in the way of areas under the floor plate level requiring frequent inspection and for access to valves, strainers, manifolds and other equipment located below the floor plate level. Coaming bars must be provided along the edge of all permanent openings.

622b. Machinery Space Gratings

Machinery space walkways and platforms must be provided with removable steel gratings as necessary for ventilation and visibility purposes. Gratings must be secured with CRES machine screws. Each grating panel must weigh less than 33 kg.

In selecting grating areas for ventilation purposes, the probable path of the return airflow and its effect on the ambient conditions surrounding important items of machinery must be

considered. These grating areas must be located away from main traffic paths and operating stations.

622c. Chain Locker Gratings

Chain locker gratings must be galvanized steel fitted with bars spaced so that the distance between centers is one-half the diameter of the wire of the chain.

623 LADDERS

623a. General

Inclined ladders, vertical ladders and stairways must be provided as necessary to provide access to all portions of the vessels. Means of access, such as vertical ladders or rungs, must be provided to tanks, voids, mast and other areas where access may be required for maintenance. All must be in accordance with regulatory requirements.

623b. Inclined Ladders

Inclined ladders must be bolted to the structure so as to allow relative motion between supporting fastenings at the head and foot. Exterior inclined ladders may be fiberglass. Where ladders are attached to the deck in way of coamings, the coamings must be cut away to eliminate a tripping hazard. Inclined ladders over stowage spaces or other inclined ladders must have sheet metal shields underneath.

623c. Vertical Ladders

Steel vertical ladders must be provided under escape windows and airports as necessary, in access trunks, and elsewhere as necessary. Where conditions do not permit installation of a vertical ladder, ladder rungs must be welded to the structure. Vertical ladders and ladder rungs must be constructed in steel in accordance with ASTM F840 and ASTM F783 and must be removable.

Notch type climber safety rails must be provided on ladders over five meters long. Climber safety rails located in the weather must be CRES.

623d. Portable Ladders

Portable ladders must be provided in storerooms where upper shelves are not accessible from the deck.

623e. Gangway

A gangway such as **ACL Industries Model CG-100** and mating receptacle must be provided in a location to be approved by the ConRep. Stowage for the gangway must be provided forward on the ship, configured to set the gangway in place with the forward stores crane.

624 DOORS, HATCHES, SCUTTLES AND MANHOLE COVERS

624a. General

Closures must be provided for all spaces and must be appropriate to the location, use, and watertight integrity of the space served, and must be equivalent in strength to the adjacent structure. All mechanical parts must be equipped with rugged corrosion resistant bearings and

pins and must be provided with means for proper lubrication. Holdbacks must be provided for all doors except where prohibited by Regulatory Body requirements.

Exterior doors must have watersheds over them, where not otherwise protected. Tops of doors must be at least 1980 mm above tops of deck coverings or step.

Minimum clear opening door widths must be 760 mm, except as follows:

a.	Double (interior and exterior)	1070 mm
b.	T&S (private and semi-private)	610 mm
c.	Staterooms	660 mm
d.	Utility spaces (linen locker, cleaning gear locker, etc.)	660 mm

Coaming heights must be as follows:

a.	Watertight / weathertight	as required by regulatory bodies
b.	[PA53]Toilet spaces	50 mm above deck covering
c.	Shower enclosures	150 mm above deck covering
d.	Laundry space	150 mm above deck covering
e.	Staterooms (main and second decks)	50 mm above deck covering

Coamings are not required for other interior spaces, and may not be provided for interior entry into other laboratories.

624b. Watertight and Weathertight Doors

Sliding, remotely operated watertight doors must be in accordance with ASTM F1196 Type 1A, Size 3 and ASTM F1197.

Except as provided below, all doors providing access from the weather to the interior of the ship must be watertight. Watertight doors entering laboratories, passageways and the Bridge must be quick acting[PA54]. Other watertight doors must be in accordance with ASTM F1069.

In addition to watertight doors required to meet Regulatory Body requirements, watertight doors must be provided as follows:

a. for access between staterooms on the second deck. These doors must be USCG Class 3.

~~b.~~[NECP 001]~~for access between the stateroom area and the laundry area on the second deck. This door must be USCG Class 3.~~

~~c.~~b. for access between the Main Machinery and Auxiliary Machinery and Engineer's ~~Stores~~ Workshop spaces. These doors must be USCG Class 3.

c. For access between the EOS and Oceanographic Winch Room. [NECP 001]

d. for access from the Wet Laboratory to the Chemistry Laboratory,

e. for access from the Wet Laboratory to the Side Sampling Station. [ECP 0037]This ~~door~~ access must be a double door with a clear width of at least ~~914~~ 1200 mm ~~in width~~,[ECP 0037]

f. for access from interior main deck passageways to the Aft Working Deck and Side Sampling Station

g. for access from the Hydrographic Laboratory to the interior of the ship[PA55].

[ECP 0037]~~A w~~Weathertight ~~roller curtain~~double doors must be provided between the Hydrographic Laboratory and the Side Sampling Station. ~~This~~ These doors must have a minimum clear ~~opening~~ width of 2000 mm and a height sufficient to permit the lift and movement of the instrument on the monorail hoist system required in Section 591~~by 2000 mm~~.[ECP 0037]

Adjoining sliding weathertight doors must be provided between the Wet Laboratory and the Aft Working Deck. These doors must be configured to provide a clear opening of 2000 mm[PA56].

[PA57]624c. Joiner Doors

Joiner doors must be in accordance with ASTM F821 and must satisfy the test requirements of IMO Resolution A.754. Kickout panels must be provided where there are no secondary means of escape.

Joiner doors must be provided to enable interior access for all staterooms, T&S spaces, Ship's Office, Hospital, Lounge, Messroom, and Conference Room.

[PA58]624d. Hatches and Scuttles

Watertight hatches and scuttles in walking and working areas must be flush. Scuttles must be quick acting. Hatches for personnel access must be quick acting or provided with a scuttle. Each hatch must be provided with a wrench or other tool for undogging the closure. The wrench must be stowed adjacent to the hatch.

Hatches and scuttles must be provided with a means of securing the closure in the fully open position. The securing device must be located and designed to be accessible and operable in a seaway. Handgrabs must be provided on hatches and scuttles to assist personnel in opening and closing the closure. Handgrabs installed on flush hatches and scuttles must be hinged, and provided with a recess within the closure for stowage. All hatch and scuttle openings with coaming height less than 600 mm must be fitted with portable guardrail stanchions and chains.

Flush weather deck hatches must be provided with troughs and 25 mm diameter drains. The minimum number of drains is one for each 2500 mm (or fraction thereof) of trough length, plus at least one drain for every isolated deck recess or hinge pocket which is not completely drained by the hatch or scuttle trough. Panel edges, recessed hinges, troughs, and fittings for flush hatches and scuttles must be fabricated of CRES 316. Drains must be in accordance with Section 528.

Hatches and scuttles must be provided where required to provide access and escapes.

[ECP 0036]~~Flush, quick acting, spring counterbalanced s~~Steel hatch covers must be provided for access from the aft working deck to second deck Scientific Stores and to the Trawl Winch Machinery Room. These hatch covers must be of a drop in type and be large enough to allow for the removal of a slung pallet (approximately 1500mm square). These hatches must have individual dogs. The top surface of these hatches must be flush to ensure trawl nets and webbing can slide freely over it with out being entangled or damaged. At least two coaming

drains, 75 mm diameter or larger, must be provided to ensure catch residue is adequately drained from around the hatch opening. Provision to remove the hatches with the aft deck cranes must be provided.~~Minimum clear opening must be 2500 mm by 2500 mm.~~[ECP 0036]

Hinged hatch covers must be provided for access from weather to the forward stores areas on the main and second deck. The hatch on the 01 level must be watertight and provided with a coaming. The hatch on the main deck must be non-tight and flush with the deck. Minimum clear opening at both deck levels must be 1500 mm by 1500 mm.

624e. Manholes

Manholes must be provided for access to all tanks, voids, and other spaces with no other openings, in locations and of the type that the spaces may require. Access may not be made through accommodation spaces. Manhole covers must be watertight or oiltight, as required. Minimum clear opening must be 380 mm by 584 mm.

[NECP 001]Manholes and covers must be in accordance with ASTM F1142 or a shipyard standard approved by the ConRep. Studs must be of CRES ~~300~~ and nuts of bronze. [NECP 001] Gaskets for watertight covers must be neoprene. Gaskets for oiltight covers must be cork/rubber.

625 WINDOWS, FIXED PORTLIGHTS AND AIRPORTS

625a. General

Airports, fixed portlights and windows must be watertight. All glass must be thermally tempered with a minimum thickness of 13 mm and must be readily replaceable aboard ship. Fixed lights, airports, or windows must be provided to each of the following spaces in which there is an exterior boundary:

a. Staterooms
b. Offices
c. Hospital
d. Lounge
e. Galley
f. Messroom
g. Conference Room
h. Bridge
i. Laboratories
j. ET Shop
k. Side Sampling Station Control Booth

[NECP 001]With the exception of the Acoustic Laboratory, Computer Laboratory, Bridge and Side Sampling Station Control Booth, as far as practical there must be one fixed light, airport, or window for each 3000 mm of exterior boundary length or portion thereof. The arrangement of windows, fixed lights and airports must be integrated into the arrangement of the associated spaces.[NECP 001] [ECP 0004] (THIS CHANGE IS APPLICABLE TO SHIP 1 ONLY) Second Deck Staterooms, ~~T~~the Acoustic Laboratory and Computer Laboratory may not be provided with

fixed lights, airports or windows[ECP 0004]. The Bridge must be provided with windows around the entire exterior boundary. The Side Sampling Station Control Booth must be provided with windows around the entire forward, outboard and aft facing sides. Exterior doors and interior stair and passageway doors must be provided with fixed lights or windows.

625b. Fixed Lights and Airports

Fixed lights in doors must be 250 mm in diameter. Fixed lights elsewhere and airports must be 400 mm in diameter. All must be centered 1600 mm above the finished deck. All fixed lights and airports must be fitted with dead lights.

Airports must be provided for spaces located on the main deck and on forward facing bulkhead for spaces located above the main deck.

625c. Windows

Windows must be in accordance with ISO 3434. Window frames must be CRES. Opening windows must be weathertight.

Opening windows must be provided for spaces located on and above the 01 level, except for forward facing bulkheads.

625d. Bridge Windows

Windows on the Bridge must be sloped outboard 10 degrees at the top. Two full-length windows must be provided at the aft end of the starboard bridge control location, to provide maximum visibility of the Side Sampling Station. Bridge windows must be equipped with roll-down tinted sunshades.

Top-hinged opening windows must be provided at the forward outboard corners of the Bridge and at the outboard bulkheads of the port and starboard bridge control stations. [NECP 001]Three **Cornell-Carr, Drawing No. CC-6020** clearview screens must be installed on the forward face of the Bridge; one port, one just off centerline and one starboard. The first off center, aft-facing window in way of the ACS must have a clearview screen. [NECP 001] Clearview screens must be heated.

An electric, variable speed, window wiper with encased heating element must be installed for each forward-facing window on the Bridge and for two aft-facing windows in way of the ACS, except where clearview screens are provided. In addition, each window not in way of direct exterior access for cleaning must be provided with a window wiper. Each window wiper must be provided with a window washing system nozzle.

Each window equipped with a window wiper must be heated.

625e. Side Sampling Station Control Booth Windows

The outboard and aft windows of the Side Sampling Station Control Booth must be sloped outboard 10 degrees at the top. Each window must be heated and provided with a window wiper.

631 PAINTING

631a. General

The Contractor must prepare a paint schedule that identifies each surface of the ship, type of paint to be applied, mil thickness, and number of coats to be applied to the surface. Exterior

colors shall be approved by the Government. [ECP 0039] Surface preparation and paint must be in accordance with Table 631-1, or a similar system that provides equivalent life cycle performance.[ECP 0039]

The entire ship, including, fittings, ventilation ducts, rails, stanchions, hatches, flagstaffs, masts, and light foundations, must be painted. Painting of equipment not mentioned herein must be as normally provided by the manufacturer for that equipment. All paint, except for the underwater body ablative coating system, must be from a single manufacturer.

Finish painting of compartments prior to testing is prohibited.

For painting purposes, the painted waterline is defined as a line 150 mm above the full load displacement waterline of the ship over the entire waterline length.

The Contractor must comply with the manufacturers' printed recommendations and instructions for all aspects of handling, mixing and application of the paint materials.

The following items may not be painted:

a. Cathodic protection anodes.
b. Heat exchange surfaces.
c. Gasket seats.
d. Lubricating fittings.
e. Nameplates, labels and signs.
f. Threads and working surfaces.
g. Rubber and other elastomers.
h. Discharge nozzles.
i. Decorative and finished parts of furnishings and equipment.
j. Isolation mounts.
k. Type II acoustic treatment.

Surface Preparation. - Prior to abrasive blasting, items or surfaces which may be damaged by abrasive contact or ingestion, or are not to be coated, must be covered, masked or removed.

Coatings applied to prevent corrosion during material storage or ship construction must be removed to bare metal unless they are compatible with the final system and are free of corrosion, peeling or other contaminants detrimental to the life or appearance of the final system.

Coatings that are compatible with the final system and are free of corrosion, peeling or other contaminants detrimental to the life or appearance of the final system, either temporary or permanent, must be applied to prevent corrosion during material stowage and ship construction, including tanks not required to be painted. Coatings containing zinc must be removed from the underwater body of the hull, and fuel and potable water tank interiors.

Where aluminum will be joined with other metals, including galvanized steel, or wood, the aluminum surface must be protected by two coats of epoxy primer. Wood in contact with aluminum must be given one coat of phenolic varnish.

After assembly, joints of dissimilar metals exposed to the weather, seawater, or in wet spaces must be sealed with caulking compound to prevent the entrance of moisture or water. Crevices must be sealed with caulking compound. Absorbent material may not be used in contact with aluminum. Threaded parts in aluminum must be coated before assembly with an anti-seize compound.

Unless otherwise specified, all steel surfaces must be prepared by sandblasting to a "near white" surface in accordance with SSPC-SP 10-85.

Surfaces to be painted must have the specified surface preparation at the time of application of the paint. If the surface is degraded or contaminated after surface preparation and prior to painting, the surface must be restored before paint application.

In order to prevent degradation or contamination of the prepared surfaces, the first coat of paint must be applied as soon as possible after the surfaces have been prepared. The first coat must always be applied the same day as surface preparation is completed. Succeeding coats must be applied before contamination of the under surface occurs.

After surface preparation, surfaces must be brushed with clean brushes, blown off with compressed air, or cleaned by vacuum to remove all traces of blast products and dust.

Application. - Application methods, coat thicknesses and equipment used for application must be as recommended by the coating manufacturer's representatives. Acceptance of the surface preparation by the paint manufacturer's representative is required prior to application of coating systems.

[ECP 0039]

Table 631-1. Coating Systems	
Area 1: Entire exterior underwater body from the keel up to the 6.2 meter water line including centerboard, wet side of the centerboard trunk, rudder and other protruding underwater appendages, but excluding the seachests.	
1. Surface Prep	See foot-note 1
2. Surface Prep Prior To 1st Under Coat	Blast damaged areas near white to SSPC- SP10 finish. Sand sweep remaining area to SSPC- SP7 finish
3. First Under Coat	Ameron 385 (Terracotta) @ 5 MM MDFT
4. Second Under Coat	Ameron 385 (Black) @ 5 mils MDFT
5. First Finish Coat	ABC #4 (Terracotta) @ 5 mils MDFT
6. 2nd Finish Coat	ABC #4 (black) @ 5 mils MDFT
Area 2: All seachest exteriors	
1. Surface Prep	See foot-note 1
2. Surface Prep Prior To 1st Under Coat	Blast damaged areas near white to SSPC- SP10 finish. Sand sweep remaining area to SSPC-SP7 finish
3. First Under Coat	Ameron 385 (Terracotta) @ 5 mils MDFT
4. Second Under Coat	Ameron 385 (black) @ 5 mils MDFT
5. First Finish Coat	Ameron 400GFK (Glassflake terracotta) @ 5 mils MDFT
6. 2nd Finish Coat	Ameron 400FK (Glassflake black) @ 5 mils MDFT
Area 3: Shell exterior from 6.2 meter water line up through turn of gunwale including the outboard side of the bulwarks.	

Table 631-1. Coating Systems	
1. Surface Prep	See foot-note 1
2. Surface Prep Prior To 1st under Coat	Blast damaged areas near white to SSPC-SP10. Sand sweep remaining area to SSPC-SP7 finish
3. First Under Coat	Ameron 302H (green) @ 3 mils MDFT
4. Second Under Coat	Ameron 385 (terracotta) @ 5 mils MDFT
5. Finish Coat	Ameron 229C (white) @ 2 mils MDFT
Area 4: Exterior steel deckhouses, vents, overflows, overhead surfaces, deck gear lockers, doors, stanchions, vertical and inclined ladders, handrails, ventilators, bulwark mounted chocks, davits and steel monorails.	
1. Surface Prep	See foot-note 1
2. Surface Prep Prior To 1st under Coat	Blast damaged areas near white to SSPC- SP10 finish. Sand sweep remaining area to SSPC-SP7 finish
3. First Under Coat	Ameron 302H (green) @ 3 mils MDFT
4. Second Under Coat	Ameron 385 (terracotta) @ 5 mils MDFT
5. Finish Coat	Ameron 229C (white) @ mils MDFT
Area 5: All exterior steel decks (150 mm up on vertical surfaces), house tops, trawlway, trawlway ramp, exterior hatch covers/coamings, foundations, deck fittings, and inboard side of bulwarks.	
1. Surface Prep	See foot-note 1
2. Surface Prep Prior To 1st under Coat	Blast damaged areas near white to SSPC- SP10 finish. Sand sweep remaining area to SSPC- SP7 finish
3. First Under Coat	Ameron 302H (green) @ 3 mils MDFT
4. Second Under Coat	Ameron 385 (terracotta) @ 5 mils MDFT
5.. Finish Coat	Ameron 385 (dark gray) @ 5 mils MDFT. Non skid grit as recommended by Ameron is to be added to the finish coat on all deck surfaces except for the trawlway and trawlway inclined ramp.
Area 6: Steel deck machinery, electric brake, motor housing exteriors, deck mounted chocks/cleats/bitts and fairleads. All required surface preparation is for structural elements prior to final assembly.	
1. Surface Prep	Blast to near white. See foot-note 1
2. First Under Coat	Ameron 302H (green) @ 3 mils MDFT
3. Second Under Coat	Ameron 385 (terracotta) @ 5 mils MDFT
4. Finish Coat	Ameron 229C (black) @ 2 mils MDFT
Area 7: Steel masts, booms, cranes, "A" frame, gantry, and similar fittings	
1. Surface Prep Prior To 1st under Coat	Blast near white. See foot-note 1
2. First Under Coat	Ameron 302H (green) @ 3 mils MDFT
3. Second Under Coat	Ameron 385 (terracotta) @ 5 mils MDFT
4. Finish Coat	Ameron 229C (buff) @ 2 mils MDFT
Area 8: Anchor	

Table 631-1. Coating Systems	
1. Surface Prep Prior To 1st Under Coat	Blast near white. See foot-note 1
2. First Under Coat	Ameron 302H (green) @ 3 mils MDFT
3. Second Under Coat	Ameron 385 (terracotta) @ 5 mils MDFT
4. Finish Coat	Ameron 229C (black) @ 2 mils MDFT
Area 9: Anchor chain	
1. Surface Prep Prior To 1st under Coat	Blast near white. See foot-note 1
2. First Under Coat	Ameron 302H (green) @ 3 mils MDFT
3. Second Under Coat	Ameron 385 (black) @ 5 mils MDFT
4. Finish Coat	Ameron 229C @ 2 mils MDFT. Color to be in accordance with Section 602f.
Area 10: Saltwater ballast tanks, pumpable fixed ballast tanks, sewage and gray water tanks, wet side of steel portion of the centerboard trunk, and miscellaneous tanks and/or voids.	
1. Surface Prep	See foot-note 1
2. Surface Prep Prior To 1st Under Coat	Blast damaged areas near white to SSPC-SP10 finish. Sand sweep remaining area to SSPC-SP7 finish
3. First Under Coat	Ameron 385 (terracotta) @ 5 mils MDFT
4. Stripe Coat	Ameron 385 (off white)
5. Finish Coat	Ameron 385 (off white) @ 5 mils MDFT
Area 11: Fresh and potable water tanks	
1. Surface Prep	See foot-note 1
2. Surface Prep Prior To 1st Under Coat	Blast near white to SSPC-SP10 finish
3. First Under Coat	Ameron 400 (grey) @ 5 mils MDFT
4. Stripe Coat	Ameron 400 (off white)
5. Finish Coat	Ameron 400 (off white) @ 5 mils MDFT
Area 12: Chain locker and sump	
1. Surface Prep	See foot-note 1
2. Surface Prep Prior To 1st Under Coat	Blast damaged areas near white to SSPC-SP10 finish. Sand sweep remaining area to SSPC-SP7 finish.
3. First Under Coat	Ameron 385 (off white) @ 5 mils MDFT
4. Stripe Coat	Ameron 385 (terra cotta)
5. Finish Coat	Ameron 385 (terracotta) @ 5 mils MDFT
Area 13: Factory installed coating systems on interior electrical equipment are acceptable. The contractor must provide touch up as may be required.	
Area 14: Engine exhausts and other surfaces above 93 degrees C, unlagged. Paint must be excluded on lagged exhaust piping where temperatures exceed 93 degrees C.	

Table 631-1. Coating Systems	
1.. Surface Prep Prior To 1st Under Coat	Blast near white to SSPC-SP10 finish prior to installation. See foot-note 1
2. First Under Coat	Ameron 878 @ 1.5 mils MDFT
3. Prep For Finish Coat	Wire brush damaged areas and wipe down entire area with a mild detergent and rinse
4. Finish Coat	Ameron 878 @ 1.5 mils MDFT
Area 15: All interior ladders outside of tanks (ladders in tanks are to receive the same coating system as the tanks where installed).	
1. Surface Prep Prior To 1st Under Coat	Blast to SSPC-SP 7 finish prior to installation
2. Under Coat	Ameron 5105 (terracotta) @ 2 mils MDFT
3. Finish Coat	Ameron 3234 (gloss black) @ 3 mils MDFT
Area 16: All exposed interior steel bulkheads and overheads in machinery and service spaces, workshops, storerooms, deck lockers and similar spaces, interior railings, stanchions and associated fittings.	
1. Surface Prep	See foot-note 1
2. Surface Prep Prior To 1st Under Coat	Wire brush damaged areas and wipe down entire area with a mild detergent and rinse
3. Under Coat	Ameron 5105 (terracotta) @ 2 mils MDFT
4. Prep For Finish Coat	Wire brush damaged areas and wipe down entire area with a mild detergent and rinse
5. Finish Coat	Ameron 3234 (white) @ 3 mils MDFT
Area 17: Exposed interior decks (150 mm up on vertical surfaces) in auxiliary machinery and service spaces, workshops, storerooms, deck lockers and similar spaces.	
1. Surface Prep	See foot-note 1
2. Surface Prep Prior To 1st Under Coat	Wire brush damaged areas and wipe down entire area with a mild detergent and rinse
3. Under Coat	Ameron 385 (dark grey) @ 6 mils MDFT
4. Prep For Finish Coat	Wire brush damaged areas and wipe down entire area with a mild detergent and rinse
5. Finish Coat	Ameron 385 (terracotta) @ 6 mils MDFT
Area 18: Walking surfaces of floor plates, grates, decks, and platforms in main machinery spaces.	
1. Surface Prep	See foot-note 1
2. Surface Prep Prior To 1st Under Coat	Wire brush damaged areas and wipe down entire area with a mild detergent and rinse
3. Under Coat	Ameron 385 (terracotta) @ 6 mils MDFT
4. Prep For Finish Coat	Wire brush damaged areas and wipe down entire area with a mild detergent and rinse
5. Finish Coat	Ameron 385 (dark gray) @ 6 mils MDFT

Table 631-1. Coating Systems	
Area 19: Machinery and foundations within machinery spaces above floor plates where the temperature is below 93 degrees C (the coating system for machinery applies to structural components prior to final assembly).	
1. Surface Prep	See foot-note 1
2. Surface Prep Prior To 1st Under Coat	Wire brush damaged areas and wipe down entire area with a mild detergent and rinse
3. Under Coat	Ameron 5105 (terracotta) @ 2 mils MDFT
4. Prep For Finish Coat	Wire brush damaged areas and wipe down entire area with a mild detergent and rinse
5. Finish Coat	Ameron 3234 (equipment gray) @ 3 mils MDFT
Area 20: Unexposed steel structure behind insulation and/or joiner panels.	
1. Surface Prep	See foot-note 1
2. Surface Prep Prior To finish coat	Wire brush damaged areas and wipe down entire area with a mild detergent and rinse
3. Finish Coat (steel surfaces)	Ameron 5105 (terracotta) @ 2 mils MDFT
4. Finish Coat (faced insulation surfaces). No paint on acoustic insulation	Ameron 3234 (white) @ 3 mils MDFT
Area 21: All exterior exposed vertical surfaces of the aluminum superstructure including vents, overflows, deck gear lockers, doors, stanchions, vertical and inclined ladders, handrails, ventilators, stack (excluding stack bands) and bulwarks. Also includes the underside of exposed deckheads	
1. Surface Prep	Power wash/degrease @ 344.7 bar
2. Surface Prep Prior To Under Coat	Sand sweep
3. Under Coat	Ameron 385 (terracotta) @ 5 mils MDFT
4. Finish Coat	Ameron 229C (white) @ 2 mils MDFT
Area 22: All aluminum exterior decks (150 mm up on vertical surfaces) house tops, exterior hatch covers, foundations, deck fittings and inboard side of bulwarks.	
1. Surface Prep	Power wash/degrease @ 344.7 bar
2. Surface Prep Prior To 1st Under Coat	Sand sweep
3. Under Coat	Ameron 385 (terracotta) @ 6 mils MDFT
4. Finish Coat	Ameron 385 (dark gray) @ 6 mils MDFT. Non skid grit as recommended by Ameron is to be added to the finish coat on all deck surfaces.
Area 23: Aluminum masts, booms, trusses and similar fittings.	
1. Surface Prep	Power wash/degrease @ 344.7 bar
2. Surface Prep Prior To 1st Under Coat	Sand sweep
3. Under Coat	Ameron 385 (terracotta) @ 5 mils MDFT

Table 631-1. Coating Systems	
4. Finish Coat	Ameron 229C (buff) @ 2 mils MDFT
Area 24: Interior of roll stabilization tank and the aluminum interior of the centerboard trunk	
1. Surface Prep	Power wash/degrease @ 344.7 bar
2. Surface Prep Prior To 1st Under Coat	Sand sweep
3. Under Coat	Ameron 385 (terracotta) @ 5 mils MDFT
4. Stripe coat	Ameron 385 (off white)
5. Finish Coat	Ameron 385 (off white) @ 5 mils MDFT
Area 25: Stack bands	
1. Surface Prep	Power wash/degrease @ 344.7 bar
2. Surface Prep Prior To 1st Under Coat	Sand sweep
3. Under Coat	Ameron 385 (terracotta) @ 5 mils MDFT
4. Finish Coat	Ameron 229C @ 2 mils MDFT
5. Stack markings	Bands must be parallel to baseline and permanently marked. Top band to be measured from top of stack. There must be no separation between bands. Top band (black) shall be 2/15th of stack height. Middle band (light blue) shall be 1/15th of stack height. Bottom band (dark blue) shall be 1/15th of stack height.
Area 26: Surfaces of unexposed aluminum structure behind insulation and/or joiner panels do not require coatings. Perforated aluminum sheathing shall be coated white at the factory. Perforated sheathing shall not be sprayed after installation.	
Area 27: Surfaces of fuel oil, lube oil, and dirty oil tanks are to be run through the wheelabrator for removal of mill scale, and are to be left uncoated.	
Area 28: Bilges	
1. Surface Prep	See foot-note 1
2. Surface Prep Prior To 1st Under Coat	Blast to SSPC-SP 7 finish
3. Under Coat	Ameron 302 (green) @ 3 mils MDFT
4. Prep For Finish Coat	Wire brush damaged areas and wipe down entire area with a mild detergent and rinse
5. Finish Coat	Ameron 385 (terracotta) @ 6 mils MDFT

Foot notes:

1. Material is to be blasted in wheelabrator to remove mill scale and oxidation. Any material not suitable for the wheelabrator is to be hand blasted. Blasting is to be finished to specification SSPC-SP10-85. After blasting all material is to be coated with one mm of Ameron all-purpose primer BSP2.

~~631b. Underwater Body Ablative Coating System~~

~~The ablative anti-foulant coating system must be a copper-based tributyltin-free system, installed in strict accordance with manufacturer's recommendations.~~

~~The underwater body is defined as the entire underwater hull plating and all appendages up to the upper boot-topping limit. The underwater ablative paint system may not be applied to sonar transducers or other underwater scientific and navigation sensors.~~

~~631c. Topside Primer~~

~~The coating system primer used on all exterior steel surfaces and appendages, excluding the trawlway and trawl ramp, must be an organic, zinc-rich epoxy paint. The primer must extend from 100 mm below the full load displacement waterline to the top of the mast.~~

~~The coating system primer for the trawlway and trawl ramp must be an inorganic zinc silicate primer.~~

~~631d. Non-Skid Deck Coating~~

~~All exterior decks and walking surfaces except the trawlway must have a non-skid topcoat surface.~~ [ECP 0039]

631~~e~~b. Technical Documentation

The Contractor must prepare the following technical documentation:

Paint Schedule. - A Paint Schedule must be provided in spreadsheet format, listing all surfaces on the ship, which will receive a coating system. The listing must be arranged by compartment, deck levels, ship structure, or general location to provide a logical presentation of the information. For each surface, the schedule must identify: the required surface preparation standard, a generic identification of each paint used to create the required coating system, the dry film thickness of each layer of paint to be used, and the color of each paint to be used in the required coating system. In addition to the requirements of section 631a, the Paint Schedule must consist of a listing of each component/space to be painted, surface, coats, paint thickness, paint type, paint color, insulation, and remarks.

Paint Report. - The Contractor must prepare a paint report that includes the Atmospheric Condition Measurements, Surface Preparation Readings, DFT Readings and Paint Manufacturer Service Reports.

a. **Atmospheric Condition Measurements.** - Atmospheric condition measurements must provide a quality control checkpoint for the environmental conditions at the time coating systems are being applied. The measurements must include the following: location, surfaces or structure being painted; the person taking the readings; the inspector; dry bulb temperature; wet bulb temperature; and relative humidity. The report must indicate any special precautions employed to control the painting environment.

b. **Surface Preparation Readings.** - Surface Preparation Readings must document surface preparation achieved in preparation for painting, and must include the following: the location, surfaces or structure being painted; the person taking the readings; the inspector; the means used to obtain the standard of cleanliness; and the texture standard achieved.

c. **Dry Film Thickness (DFT) Readings.** - DFT readings must be documented for each layer of cured paint, and must include the following: location, surfaces or structures painted; the person taking the readings; the measurement tool; tool calibration; the inspector; and the dry film thickness of a representative average of the surface coated.

d. **Paint Manufacturer's Service Reports.** - The Contractor must provide copies of all reports made by the paint manufacturers' representatives made to the shipyard.

633 CATHODIC PROTECTION

An impressed current cathodic protection system must be provided to protect the underwater hull, appendages, sea chests, and other components exposed to seawater. The reference cell and anodes must be faired smooth to prevent underwater flow noise. A galvanic survey of the ship must be conducted in seawater, and system output voltage and current adjusted accordingly.

634 DECK COVERING

634a. General

Deck coverings may not be installed under enclosed built-in furniture or under equipment with enclosed foundations.

Deck coverings must be installed to allow for proper deck drainage. Adjustment of deck covering thickness or underlay must be used to slope the deck for drainage in built in shower stalls, within coamings, and in the immediate vicinity of drains. Underlay must be used to smooth over deck welds in order to prevent wear spots. [ECP 0045]Lightweight underlay is permitted, provided all applicable regulatory and contract requirements are satisfied.[ECP 0045]

Decks in spaces for which deck coverings are not otherwise required must be painted.

Deck coverings must be protected to prevent wear or indentation prior to ship delivery.

634b. [NECP 001]~~Terrazzo~~ Polyurethane Deck Covering

~~Epoxy based terrazzo~~Polyurethane deck covering such as ~~**Selby Battersby Selbalux**~~**PRC Products Proreco I** must be installed in the following spaces:

a. food preparation areas

b. laundry

c. built in sanitary spaces

A 150 mm CRES cove, made watertight by continuous weld, must be provided where ~~terrazzo~~ polyurethane covering is installed. [NECP 001]

634c. Vinyl Composition Deck Covering

Vinyl composition deck covering such as **Armstrong Standard Excelon** must be provided in the following spaces:

a. Messroom
b. Hospital
c. laboratories (except as otherwise required)
d. passages
e. Exercise Room
f. Bridge
g. Offices

A 100 mm cove must be provided where vinyl deck covering is installed.

634d. Carpeting

One hundred percent wool, single level, loop woven through the back carpeting must be provided in the following spaces:

a. staterooms
b. Conference Room
c. Lounge

634e. Safety Treads

Safety treads must be of the fiberglass reinforced type, weather resistant with a non-skid surface. Treads must be adhered to bare metal by applying an epoxy adhesive to all faying surfaces.

Treads must be provided at the head and foot of all inclined ladders and stairs, on each step on inclined ladders and stairs, on each side of weather doors, and on each side of doors with sills higher than 100 mm. Treads on ladders and stairs must approximately cover the entire area of each step. All other treads must be 150 mm by 600 mm. [NECP 001] Diamond tread is an acceptable substitute for safety tread. In joiner areas, adhesive backed non-skid composition may be used on stair treads. [NECP 001]

634f. Electric Grade Flooring

Electric grade smooth flooring must be permanently installed in the front and rear of all switchboards, control consoles, control boards, and on deck areas on which personnel stand when servicing electrical equipment where shock hazards may exist. Electric grade flooring must also be provided in the following spaces:

a. Computer Laboratory
b. Acoustic Laboratory
c. ET Shop
d. Radio/Chart Area of the Bridge

~~e.~~[ECP 0003C]~~Marine Mammal Observation Stations~~[ECP 0003C]

634g. Polyurethane Deck Coverings

[NECP 001]A polyurethane deck covering such as **PRC Products PRORECO I** ~~or terrazzo~~ must be provided in the Fish Laboratory, Wet Laboratory and the Hydrographic Laboratory. [NECP 001]

635 THERMAL, ACOUSTIC ABSORPTIVE AND FIRE PROTECTION INSULATION TREATMENT OF COMPARTMENTS

635a. General

The surfaces to which insulating material is applied must be cleaned and given a protective coating as required in Section 631. Insulating materials must be installed to prevent them from coming adrift under the ship's movement and vibrations. Installation may be by weld studs with clips or by adhesives. Abutting edges of insulation must be sealed with adhesive, and the seams must be covered with 50mm wide tape in accordance with the manufacturer's recommendations. Free edges of insulation must be sealed with adhesives and covered with tape in accordance with the manufacturer's recommendations.

635b. Thermal Insulation

Except where required herein, insulation U-factors (heat transmission factors), thickness and application of insulation must be in accordance with SNAME Technical and Research Bulletin No. 4-7. [ECP 0044] Advanced lightweight insulating materials may be used with ConRep approval. When such advanced insulating materials are used, U-factors, thickness and application must be in accordance with manufacturer's recommendations.[ECP 0044]

[ECP 0041]Boundary thermal insulation must be ~~fibrous glass~~ board or blanket.[ECP 0041] Thermal insulation must have a thermal conductivity 'k' of no greater than 0.043 at a mean temperature of 24°C.

Where both thermal and acoustic insulation are required, 25mm thick thermal insulation with vapor sealing must be installed under the acoustic insulation, except that the thermal insulation need not be installed provided condensation will not occur under the acoustic insulation, and the U-factor of the acoustic insulation alone is not greater than that afforded by thermal insulation.

Except where joiner bulkheads form the boundary, all boundaries between air-conditioned and non-air-conditioned areas must be thermally insulated. Where steel bulkheads with joiner lining form the boundary, a minimum insulation thickness of 25 mm must be provided. Decks between air-conditioned and non-air-conditioned spaces must be provided with a minimum insulation thickness of 25 mm on plane surfaces and around webs and flanges of structural members. Insulation on weather boundaries must extend at least 300 mm beyond exposed surfaces.

635c. Acoustic Insulation

Acoustic insulation must be in accordance with Section 073.

635d. Fire Safety Insulation

Fire safety insulation must be provided as needed to meet all Regulatory Body requirements.

635e. Antisweat Protection

Antisweat treatment must be applied on the warm side of uninsulated boundaries, including webs and flanges of beams and stiffeners.

Anti-sweat treatment must be provided on all decks and bulkheads forming boundaries between heated spaces and either tanks or the exterior. Anti-sweat treatment need not be applied on bulkheads or decks that are insulated or sheathed.

635f. Vapor Barriers

Vapor barriers must be applied to insulation located within the Laundry and Galley, and to the insulation on the warm side of refrigerated stores spaces.

637 SHEATHING

637a. General

Access panels must be provided in sheathing for maintenance and inspection.

637b. Sanitary Sheathing

Sanitary bulkhead and overhead sheathing must be installed in the Galley and the Incinerator/Trash Compactor Room. Sanitary sheathing must be CRES 304, satin finish, USSG 16 for the bulkheads, and USSG 20 for the overhead.

Sheathing in refrigerated spaces must be CRES 304, USSG 12 for decks, and USSG 16 for overheads and bulkheads.

637c. Sheathing

[ECP 0046]Perforated galvanized steel or aluminum sheathing must be of nominal 3 mm thickness with 5 mm holes on 9 mm staggered centers and must extend a minimum of 1200 mm above the deck, floorplates, or grating. Perforated galvanized steel or aluminum sheathing must be installed over Type II acoustic treatment in machinery spaces and workshops.[ECP 0046]

Protective sheathing must be galvanized steel, USSG 16, and must extend 1500 mm above the finished deck. Protective sheathing must be installed over insulation wherever it may be subject to damage by personnel, material handling or storage and is not otherwise protected by the installation of linings, sanitary sheathing or perforated galvanized sheathing.

638 THERMAL INSULATION FOR REFRIGERATED SPACES

638a. General

Refrigerated spaces must be provided with shelving, three high, with a depth of at least 600 mm. Shelves must be suitably equipped with restraining battens and clips.

Refrigerated spaces must be provided with full height vertical shifting battens with deck and overhead sockets for bulk stowage. The overhead sockets must be formed by a false ceiling of expanded metal, and the deck sockets by making use of slots in the deck grating.

638b. Insulation

Refrigerated spaces must be insulated to maintain the temperatures required in Section 516. Insulation must prevent sweating on the warm side of exposed surfaces of decks, bulkheads, or shell in way of the refrigerated spaces, at a relative humidity of 80 percent over an ambient air temperature range of 4°C to 38°C in still air. The U-values for bulkheads and overhead may not exceed 0.57. The U-value for decks may not exceed 0.06.

Rigid insulation must be used for built-up refrigerated space boundaries. Insulation blocks must be installed at least two layers thick and the joints must be staggered.

Where insulation is installed in stiffener side of decks or bulkheads, the thickness of the insulation in way of stiffener flanges must be sufficient to prevent condensation on the warm side under design conditions. Deep structural members must be boxed in with insulation. Sheathing must be applied in accordance with Section 637.

638c. Grating

Aluminum or glass reinforced plastic (GRP) removable gratings must be provided in all refrigerated spaces. Gratings must be raised 25 mm above the deck and supported at regular intervals. Supports must allow for airflow and drainage.

640 REQUIREMENTS FOR LIVING SPACES, MESSROOM AND LOUNGE

640a. General

Each accommodation must have a berth.

640b. Berths

[ECP 0043]Two high berths must be in accordance with ASTM F1244 Type III, except that construction may be of aluminum of equivalent strength and rigidity. Single berths must be in accordance with ASTM F1244 Type II, except that construction may be of aluminum of equivalent strength and rigidity.[ECP 0043] Each berth must be provided with mattresses and box springs in accordance with ASTM F1085 Type II. There must be at least 900 mm clearance above each mattress. Berths must be fitted with reading lamps. Privacy curtains must be provided for each berth in two berth staterooms. Berths may not be obstructed by pipes, ducts, or other obstructions.

640c. Single Staterooms

Single staterooms must be furnished in accordance with Table 640-1.

Table 640-1. Single Stateroom Furnishings

Qty	Item	Type	Remarks
1	Berth	Single, Officer's, with 3 drawers under	2070 mm x 980 mm
1	Desk	Flat top, single pedestal	1010 mm wide x 765 mm deep
1	Desk lamp		

Qty	Item	Type	Remarks
2	Side chair		
1	Clothes locker	Single door, with shelves and hanging section	535 mm wide x 560 mm deep x 2060 m high
1	Chest of drawers	Officer's, three drawer	765 mm wide x 485 mm deep x 765 mm high
1	Swivel chair		
1	Waste basket		
2	Book rack		
1	File cabinet	Five drawer	
2	Coat and hat hook		
1	Life jacket and survival suit stowage		

640d. Double Staterooms

Double staterooms must be furnished in accordance with Table 640-2.

Table 640-2. Double Stateroom Furnishings

Qty	Item	Type	Remarks
1	Berth	Double, Officer's, with 3 drawers under	2070 mm x 980 mm
1	Desk	Flat top, single pedestal	1010 mm wide x 765 mm deep
1	Desk lamp		
1	Side chair		
2	Crew clothes locker	Double door, with shelves and hanging section	610 mm wide x 535 mm deep x 2100 mm high
1	Swivel chair		
1	Waste basket		
2	Book rack		
4	Coat and hat hook		
2	Life jacket and survival suit stowage		

640e. Messroom

The Messroom must be provided with outfit items in accordance with Table 640-3.

Table 640-3. Messroom Furnishings

Qty	Item	Type	Remarks
1	[NECP 001]Ice Maker/ Water Dispenser		
1	Coffee Maker	30 cup	
1	Electric Toaster	4 slice	
1	Cold Beverage Dispenser	~~3~~ 2 beverage types	
1	Refrigerator/Freezer	0.30 m^3	Under counter
1	Salad Bar		
1	Microwave Oven	~~1500 w~~	~~Variable power and time~~
1	Vending Machine		Snacks and drinks
1	Plate/Bowl Dispenser		
1	Steam Table		
1	Dry Heat Food Table		
4	Table	6 person	1800 mm x 750 mm
2	Table	4 person	900 mm x 900 mm
~~30~~32	Mess Chairs [NECP 001]		
1	Sideboard		1600 mm x 530 mm
15	Coat and Hat Hook		
4	Cork Bulletin Board	Aluminum frame 1200 mm x 900 mm	Located as directed by ConRep

644 SANITARY SPACES, AND FIXTURES

644a. General

Sanitary spaces must be complete with all fixtures, fittings and accessories required for a complete facility.

644b. Toilets

Toilets must be commercial quality vacuum flush vitreous china jet elongated rim type complete with hand operated flush valve and solid plastic open front seat with cover and self-sustaining hinge. Each toilet must be provided with a toilet paper holder. A toilet must be provided in each washroom and in each toilet/shower space.

644c. Lavatories

Lavatories must be commercial quality, vitreous china or CRES with splash back, front overflow, and soap depression. Basin size must be approximately 330 mm by 250 mm. Lavatories must be complete with supply fixtures and drain fittings. A mirror must be provided over each lavatory. Each lavatory must be provided with a tumbler and toothbrush holder. Each lavatory

must be provided with an adjacent surface mounted electrical receptacle and light. Lavatories must be provided in the following locations:

a. each washroom
b. each double stateroom
c. the hospital
~~d.~~[ECP 0001F]~~each toilet/shower space~~ [ECP 0001F]

644c. Showers

Shower stall enclosures must be at least 750 mm by 750 mm inside dimensions, and provided with a sill. Showerheads must be installed so that the minimum distance between the finished deck and the shower head is at least 1850 mm. Showerheads must be fitted with restricting devices which limit the flow of water to 0.15 L/sec at 275 kPa. Each shower must be provided with a shower curtain, curtain rod, curtain hooks, soap dish and hand grab.

644d. Service Sinks

Service sinks must be CRES 304, USSG 14, No. 4 finish. Bowl size must be approximately 630 mm by 480 mm by 300 mm deep. Service sinks must be complete with supply fixtures and drain fittings. Service sinks must be provided in the following locations:

a. each cleaning gear locker
b. Laundry
c. Engineer's Workshop
d. Sewage Treatment Room

644e. Laboratory Sinks

Laboratory sinks must be complete with supply fixtures and drain fittings. Laboratory sinks must be provided in accordance with Table 644-1.

Table 644-1. Laboratory Sinks

Qty	Location	Material	Remarks
2	Wet Laboratory	CRES 304	Double, hospital style, 460 mm x 460 mm x 460 mm, each side
1	Dry Laboratory	CRES 304	
1	Controlled Environment Room	CRES 304~~[PA59]~~	
2	Chemistry Laboratory	Epoxy	Removable
1	Autosalinometer Room	CRES 304	[ECP 0001D] 205 mm x 205 mm x 205 mm [ECP 0001D]

644f. Galley Sinks

Sinks must be provided in the Galley as needed for food preparation and clean up.

644g. Drinking Fountain

One drinking fountain such as **Halsey Taylor Model S1000-10D** must be provided in each of the following locations:

a. Each accommodation area
b. Main deck passageway near the laboratories
c. Bridge
d. EOS

644h. Toilet/Shower Spaces

Toilet/shower spaces may either be built in place or prefabricated. Each toilet/shower space must be provided with a toilet cabinet mounted over the toilet, a towel bar, robe hook, and a handgrab. [ECP 0001F]Toilet/shower spaces must contain a toilet~~,~~ and a shower~~, and a lavatory~~.[ECP 0001F]

Toilet/shower spaces must be provided as follows:

a. One for each stateroom
b. One for the hospital
c. One adjacent to the Ready Room (may be two separate spaces~~[PA60]~~)
d. One in the accommodations area on the second deck

645 LEISURE FACILITIES

645a. Lounge

The lounge must be provided with furnishings in accordance with Table 645-1.

Table 645-1 Lounge Furnishings

Qty	Item	Type	Remarks
1	Card Table	6 person	
6	Chair	Card table	
2	Sofa	1800 mm	

Qty	Item	Type	Remarks
2	PC Workstation	1050 mm wide x 750 mm deep	With adjustable keyboard mount, shelf, and drawer unit
	Storage Cabinet	450 mm deep x 1000 mm high	4000 mm linear measure
	Book Shelf	380 mm deep x 1000 mm high	4000 mm linear measure
1	Magazine Rack	760 mm x 250 mm x 890 mm	
1	End Table	760 mm x 760 mm	
1	Table Lamp		
2	Waste Basket		
2	Display Case	1200 mm by 1000 mm, 3 shelves each	For Ship's Store Items
[NECP 001]~~2~~	~~Vending Machine~~		~~One candy; one soft drink~~[NECP 001]
8	Coat and Hat Hooks		
1	Entertainment Center		Entertainment system in accordance with Section 432

645b. Exercise Room

Exercise equipment must be of good commercial quality. The exercise room must be equipped in accordance with Table 645-2.

Table 645-2. Exercise Room Equipment

Qty	Item	Type	Remarks
1	Exer-cycle		
1	Treadmill		
[NECP 001]~~1~~	~~Abdominal Board~~		
~~1~~	~~Wall Ladder~~		
1	Exercise Bench		
2	Foam Mat	1800 mm x 1200 mm x 50 mm with vinyl cover	
~~2~~	~~Locker~~	~~Steel 450 mm x 530 mm x 1980 mm~~	~~Single tier~~[NECP 001]
1	Mirror	1800 mm x 600 mm	

645c. Ready Room

The Ready Room must be equipped in accordance with Table 645-3[PA61].

Table 645-3. Ready Room Equipment

Qty	Item	Type	Remarks
As Req'd	Bench Seating		For eight persons
18	Coat Hook	Heavy Duty	For foul weather gear
18	Boot Drying Rack		

651 FOOD SERVICE SPACES

651a. General

The galley must be furnished and equipped to provide cafeteria style food service to the ships complement. All equipment must be of good commercial design modified as needed to suit shipboard conditions.

Cabinets, dressers, counters, shelves and stowage racks must be provided. The number and type must be adequate to provide proper food preparation and clean-up areas as well as stowage for all portable equipment, including china, silverware, utensils, trays, spare parts, etc.

Three sinks must be provided, including one located in the scullery area.

651b. Materials and Workmanship

All surfaces which may come in contact with food and drink must be CRES 304, Finish No. 4. All welding must be flush, ground smooth and polished on exposed surfaces. No solder or rivets must be used. Sinks must be CRES 304, USSG 14, No. 4 Finish.

651c. Scullery

A scullery area must be provided within the galley. The scullery must be separated from the food preparation and service area by a CRES partition extending at least 600 mm above the top of the dressers.

A separate pass through window must be provided from the mess room into the scullery area for passing soiled dishes.

651d. Equipment

The galley must be fully equipped to provide food service to the ship's complement. Marine grade galley equipment must be provided, in sizes and quantities to allow meal service to the entire ships' complement within 90 minutes. As a minimum, equipment in accordance with Table 651-1 must be provided.

Table 651-1. Galley/Scullery Equipment

Qty	Item	Type	Remarks
1	Electric Range	With roast oven	
1	Vent Hood	Mounted over range	
1	Electric Convection Oven		
1	Refrigerator/Freezer	0.48 m^3 refrigerator/ 0.40 m^3	

Qty	Item	Type	Remarks
		freezer	
1	Steam Kettle/Cooker		
1	Garbage Grinder		sink mounted
1	Dishwasher		Under counter
1	Electric Griddle	910 mm	
1	Mixer	Bench model	
1	Microwave	1500 w	variable power and time
[NECP 001]~~1~~	~~Steam Table~~		
~~1~~	~~Dry Heat Food Table~~		
1	Deep Fryer	Counter model	
1	Baker's Scale	3.6 kg capacity	
~~1~~	~~Proofer, Electric~~[NECP 001]		

652 HOSPITAL

The hospital must be outfitted to meet regulatory requirements. As a minimum items in accordance with Table 652-1 must be provided.

Table 652-1. Hospital Furnishings

Qty	Item	Type	Remarks
1	Treatment Table		
1	PC Workstation	1050 mm wide x 750 mm deep	With adjustable keyboard mount, shelf, and drawer unit
1	Swivel Chair		
[NECP 001]~~3~~2	Side Chair[NECP 001]		
1	Berth	Double, Officer's, with drawers under	2070 mm x 980 mm
2	Clothes Storage Cabinet		
2	Book Rack		
1	Medical Supply Storage Cabinet		815 mm wide x 405 mm deep x 1700 mm high
1	Eye/Face Wash Fountain		
1	Waste Basket		
2	Life jacket and survival suit stowage		

655 LAUNDRY

All laundry equipment must be good commercial quality, suited for marine service. Equipment must be provided in sizes and quantities to allow complete weekly laundry service for the ships' complement. As a minimum, the laundries must be outfitted in accordance with Table 655-1.

Table 655-1. Laundry Equipment

Qty	Item	Type	Remarks
3	Washer	Heavy duty, 6.8 kg capacity	front loading
3	Dryer	Heavy duty, 6.8 kg capacity	front loading
1	Ironing Board	1350 mm x 400 mm	with padded top
1	Iron		
1	Stowage cabinet		
1	Jackrod		2000 mm linear measure
1	Service sink		
1	Waste Basket		

661 OFFICES AND CONFERENCE ROOMS

661a. Ship's Office

The Ship's Office must be outfitted in accordance with Table 661-1.

Table 661-1. Ship's Office Furnishings

Qty	Item	Type	Remarks
4	Computer Workstations	1050 mm wide x 750 mm deep	With adjustable keyboard mount, shelf, and drawer unit
4	Swivel Arm Chair		
3	Side Chair		
4	File Cabinet	Five drawer legal size	With lock
2	Bookcase	Two shelf, 1200 mm long	
1	Cork Bulletin Board	Aluminum frame 1200 mm x 900 mm	
1	Markerboard	1050 mm x 1500 mm	

Qty	Item	Type	Remarks
1	[NECP 001]~~Drawing Cabinet~~Table	1200 mm wide x 1000 mm deep x 1000 mm high[NECP 001]	
1	Waste Basket		

661b. Conference Room

The Conference Room must be outfitted in accordance with Table 661-2.

Table 661-2 Conference Room Furnishings

Qty	Item	Type	Remarks
1	Conference Table	3000 mm x 1500 mm	
10	Arm Chairs		
1	White Marker Board	1800 mm x 900 mm	
1	Waste Basket		

662 MACHINERY CONTROL CENTER FURNISHINGS

662a. Engineer's Operating Station

The Engineer's Operating Station must be furnished in accordance with Table 662-1.

Table 662-1. Engineer's Operating Station Furnishings

Qty	Item	Type	Remarks
1	Computer Workstation	1050 mm wide x 750 mm deep	With adjustable keyboard mount, shelf, and drawer unit
1	Swivel Arm Chair		
2	Side Chair		
1	File Cabinet	Four drawer legal size	With lock
1	Bookcase	Two shelf, 1200 mm long	
1	Cork Bulletin Board	Aluminum frame 1200 mm x 900 mm	
1	Markerboard	1050 mm x 1500 mm	
[ECP 0024] ~~1~~	~~Eye/Face Wash Fountain~~ [ECP 0024]		
1	Waste Basket		

663 BRIDGE AND RADIO/CHART AREA FURNISHINGS

663a. Bridge Arrangement

Ship control stations on the Bridge must be located at the SCC, the port and starboard control stations, and at the ACS. The distance between the SCC and the other control stations may not exceed 12 m.

Controls and displays must be arranged by function so that the ship controls and navigational equipment are organizationally separated on the console from mission controls, displays and instruments. Selection of location for the various units and arrangement of controls and displays on the consoles must be based on visibility, frequency of use, ease of operation and other aspects of human engineering. Control equipment and displays must have the same look and feel at each control station. The use of fiddleboards above the consoles is desirable for equipment such as radios and for equipment with displays that are required to be visible from all locations on the Bridge. Recessing of equipment in the overhead is permissible for local displays.

The port and starboard bridge control stations must be provided with pedestal-type control consoles, located at least 760 mm inboard of the surrounding bulkheads. These consoles must be fitted with propulsion, bow thruster and ship steering controls.

No portion of the bridge control consoles, bookcases, or other structure or furnishings must extend higher than 1350 mm above the deck. Overhead mounted equipment must extend downward no further than 1900 mm above the deck when located above deck mounted equipment.

The ACS must be provided in the aft-most portion of the Bridge on centerline. The station must be provided with controls for trawl winches, net reel, aft cranes, gantry, Gilson and outhaul winches, oceanographic winch and ship controls.

The Bridge must include an open Radio/Chart Area. The Radio/Chart Area must be separated from the rest of the Bridge by curtains.

663b. Bridge Furnishings

In addition to the racks, shelves and cabinets required to house electronics, navigation and control equipment, the Bridge must be provided with the furnishings listed in Table 663-1.

Table 663-1. Bridge Furnishings

Qty	Item	Type	Remarks
4	Bookrack	1200 mm length each	
2	Ship Status Board	1800 mm x 1000 mm	
1	Pilot Chair		
1	Flag Stowage Locker		
2	Desk Lamp		With red filter
1	Stool		
1	Chart Table	2290 mm x 1120 mm with six drawers	With chronometer stowage

Qty	Item	Type	Remarks
2	File Cabinet	Two drawer, legal size	With lock
1	Waste Basket		

663c. Side Sampling Station Control Booth

The Side Sampling Station Control Booth must be provided with console-mounted controls for the A-frame, the hydrographic winches and the drop target strength winch. The booth must be equipped with a stool.

664 DAMAGE CONTROL LOCKERS

Each Damage Control Locker must be provided with the items listed in Table 664-1. Stowage racks, bins, stowage clips and brackets must be provided to efficiently stow the listed damage control equipment. Bins must be provided with adjustable shelves to accommodate various sized components. Equipment storage locations must be labeled. Both sides of the Damage Control Locker doors must be stenciled in 75 mm high red letters “DAMAGE CONTROL LOCKER”. A checklist identifying all damage control equipment must be mounted in each Damage Control Locker.

Table 664-1. Damage Control Locker Outfitting

Qty	Item	Type	Remarks
2	Fireman’s Suit	Waterproof/Heat Resistant	
2	Sets of Boots & Gloves	Rubber or other electrically non-conductive material	
2	Rigid Protective Helmet		
2	Self Contained Breathing Apparatus (SCBA)	with 30 minutes air	
2	Spare Air Cylinders	for SCBA	
2	Fireproof Lifeline		
2	Flashlights	Type II or III	With spare batteries
6	B-II CO2 Fire Extinguisher		Spares
2	B-II Dry Chemical Fire Extinguisher		Spares
2	Fire Hose		Spare
1	Grounding Wand	FSN 1H-5920-01-029-4176	
4	Metal Patches		Various Sizes
4	Damage Control Shoring		Various Sizes
1	Portable Electric Fire & Dewatering Pump		

665 WORKSHOPS

665a. Engineer's Workshop

The Engineer's Workshop must be outfitted in accordance with Table 665-1.

Table 665-1. Engineer's Workshop Outfitting

Quantity	Description
[ECP 0024] 1	Eye/Face Wash Fountain [ECP 0024]
1	Grinder, 250 mm, pedestal
1	Drill press, 500 mm stand with titling table
1	Service sink
1	Vise, combination, bench and pipe, bench mount
1	Workbench, metal, 2000 mm x 700 mm
1	Cabinet, modular drawer
1	Stool, general purpose
1	Lathe, 325 mm, geared head, 650 mm between centers
1	Workbench, electrical/electronics, 2000 mm x 700 mm, with two cabinets under
1	Press, arbor, hand-operated, 12 tons
1	Milling machine, bench mount
1	Locker, tool stowage
1	Rack, stowage, bar and pipe, 2.5 m by 0.3 m, 2 m high

665b. Bosun's Locker

Shelves, pipe, jackrods, portable metal battens and hooks for blocks and tackle must be provided in the Bosun's Locker. In addition, the Bosun's Locker must be equipped in accordance with Table 665-2.

Table 665-2. Bosun's Locker Equipment

Qty	Item	Type	Remarks
1	Workbench	Steel, 1220 mm x 700 mm	with storage cabinet, 4 drawers and shelf under
1	Vise	250 mm	combination bench/pipe, mounted on workbench
2	Cabinet	Modular Drawer, 5-drawer unit	

665c. Electronic Technician's Workshop

The ET Shop must be equipped in accordance with Table 665-3.

Table 665-3. ET Shop Equipment

Qty	Item	Type	Remarks
1	Workbench, Electronics	2000 mm x 700 mm, with two modular drawer units under	Lock-in/lock-out drawers
4	Cabinet	Modular Drawer, 4 drawer unit, locking	760 mm height, with lock-in/lock-out drawers of various heights
5	Cabinet	Modular Drawer, locking	1500 mm height, with lock-in/lock-out drawers of various heights

667 LABORATORIES

667a. General

Laboratories must provide maximum flexibility in working arrangements. Exposed structure, brackets, cabling, and other dirt collecting surfaces must be kept to a minimum. The final laboratory arrangement showing all cabinets, furnishings, sinks, fume hoods, etc. must be approved by the ConRep prior to fabrication.

[ECP 0032] Electronic equipment racks must be securely mounted top and bottom using shock mount hardware. Shock mounts must be sized for the weight of the rack plus approximately 200 kg of installed equipment.[ECP 0032]

667b. Unistrut Sections

Heavy duty steel **Unistrut** sections must be provided on bulkheads and overheads for the support of benches, cabinets, shelves, instruments, and other equipment. Bulkhead Unistrut sections must be mounted vertically at 600 mm intervals to conform to the bolt grid required in Section 100. These Unistrut sections must be anchored to the deck and secured and braced to the overhead structure. Overhead Unistrut sections must be installed in line with the deck bolt grid pattern.

[ECP 0001D] Unistrut sections in the Fish Laboratory, ~~and~~ Wet Laboratory and Hydrographic Laboratory must be CRES [ECP 0001D].

667c. Cabinetry and Furnishings

Cabinetry must be CRES 304. Units must be installed using the vertical runs of Unistrut sections and installed to a height of 1800 mm.

[ECP 0001D] Benchtops in the Fish Laboratory, Wet Laboratory and Hydrographic Laboratory must be CRES [ECP 0001D]. Benchtops in the Chemistry Laboratory must be covered

with a chemical-resistant material such as **WilsonArt, Chemsurf**. Benchtops elsewhere must be covered with high-pressure laminate.

[ECP 0001D]~~Based on bulkhead linear measurement, cabinetry in the Wet Laboratory, Controlled Environment Room, Chemistry Laboratory, Dry Laboratory, Autosalinometer Room and Acoustic Laboratory may not be less than the following~~Cabinetry and furnishings in the Laboratories must be as follows:

Table 667-1. Wet/Fish Laboratory

Qty	Item	Type	Linear Measurement	Remarks
1	Base cabinet with doors		2500 mm	Includes sink cabinets
1	Base cabinet with drawers		1200 mm	
1	Bulkhead cabinet		6100 mm	
1	Benchtop	910 mm tall	4800 mm	
1	Counter	910 mm tall	3600 mm	
1	Benchtop	910 mm tall	4800 mm	
1	Base table for scales		1200 mm	Height of sorting table
2	Stool with backrest			
1	Wastebasket			

Table 667-2. Computer Laboratory

Qty	Item	Type	Linear Measurement	Remarks
1	Base cabinet with drawers	Three 457 mm pedestals	1371 mm	
1	Bulkhead cabinet		6850 mm	
1	Bulkhead shelf		3600 mm	
1	Benchtop	740 mm tall x 600 mm deep	10200 mm	Seven sitting positions for computer workstations
2	File cabinet	750 mm deep x 450 mm wide		
2	Storage cabinet	450 mm deep x 900 mm wide		Office supply type
7	Swivel arm chair			

Qty	Item	Type	Linear Measurement	Remarks
5	Equipment rack	19 inch (483 mm) standard, 915 mm depth		[ECP 0002C]1800 mm high, with 760 mm clearance behind or through-bulkhead access[ECP 0002C]
2	Waste basket			

Table 667-3. Acoustic Laboratory

Qty	Item	Type	Linear Measurement	Remarks
1	Base cabinet with doors	450 mm deep	2400 mm	Two sitting positions
1	Base cabinet with drawers		2400 mm	
1	Bulkhead shelf		2400 mm	
1	Benchtop	740 mm tall	3300 mm	
1	Benchtop	740 mm tall x 450 mm wide	2400 mm	
1	File cabinet	750 mm deep x 450 mm wide		
1	Table	1350 mm wide x 2100 mm long	1350 mm	
4	Swivel arm chair			
1	Waste basket			

Table 667-4. Dry Laboratory

Qty	Item	Type	Linear Measurement	Remarks
1	Base cabinet with doors		2400 mm	Includes sink cabinets
1	Base cabinet with drawers		5800 mm	
1	Bulkhead cabinet		3600 mm	
1	Bulkhead shelf		8400 mm	
1	Benchtop	910 mm tall	7200 mm	
1	Benchtop	740 mm tall	7200 mm	Three sitting positions
2	File cabinet	750 mm deep x 450 mm wide		

Qty	Item	Type	Linear Measurement	Remarks
2	Equipment rack	19 inch (483 mm) standard, 915 mm depth		[ECP 0002C]1800 mm high, with 760 mm clearance behind or through-bulkhead access[ECP 0002C]
3	Swivel arm chair			
2	Stool with backrest			
2	Waste basket			

Table 667-5. Autosalinometer Room

Qty	Item	Type	Linear Measurement	Remarks
1	Base cabinet with doors		2400 mm	Includes sink cabinets
1	Base cabinet with drawers		1200 mm	
1	Benchtop	910 mm tall	3700 mm	
1	Stool with backrest			

Table 667-6. Hydrographic Laboratory

Qty	Item	Type	Linear Measurement	Remarks
1	Open base cabinet with lipped wire shelving		2400 mm	
1	Open shelving with lipped shelves		3700 mm	
1	Benchtop	910 mm tall	3700 mm	One sitting position

Table 667-7. Chemistry Laboratory

Qty	Item	Type	Linear Measurement	Remarks
1	Base cabinet with doors		2400 mm	Includes sink cabinets
1	Base cabinet with drawers		1800 mm	
1	Bulkhead cabinet		3900 mm	
1	Bulkhead shelf		4000 mm	
1	Benchtop	910 mm tall	7750 mm	

Qty	Item	Type	Linear Measurement	Remarks
1	Benchtop	740 mm tall	3100 mm	
2	Swivel arm chair			
1	Stool with backrest			
1	Waste basket			

~~a. Base units with doors 25 percent~~

~~b. Base units with drawers 35 percent~~

~~c. Bench-tops, 740 mm high 15 percent~~

~~d. Bench-tops, 910 mm high 80 percent~~

~~e. Bulkhead mounted wall cabinets 30 percent~~

~~f. Bulkhead mounted wall shelving 30 percent~~[ECP 0001D]

667d. Fume Hoods

Fume hoods must be laboratory grade laminar flow Class A, such as **Labconco Protector Series**. Hoods must be provided with explosionproof lighting and connections to a remotely located blower. [ECP 0002A] Hoods must be installed in their own storage cabinets, except for the Chemistry Laboratory fume hood. The fume hood for the Chemistry Laboratory shall be installed over a sink in the laboratory area. A separate acid storage cabinet must be provided in the Chemistry Laboratory and installed [NECP 001]~~under a countertop near~~ adjacent to[NECP 001] the fume hood. Hood linings must be in accordance with NFPA Std. 45 and ASTM E162-76.

The exhaust from each fume hood may not be combined with the exhaust from any other fume hood or any other exhausts and must be discharged directly to weather at a distance greater than 3 meters from working areas.

Fume hoods must be provided in accordance with Table 667-~~1~~8.

Table 667-~~1~~8. Fume Hoods

Qty	Size	Cabinet	Location
~~2~~1*	1200 mm	**Protector** Acid Storage Cabinet	Chemistry Laboratory
1	890 mm	**Protector** Solvent Storage Cabinet	Wet Laboratory

* THIS CHANGE IN QUANTITY IS APPLICABLE TO SHIP 1 ONLY. [ECP 0002A]

667e. Scientific Refrigerators and Freezers

All Scientific refrigerators and freezers must be in accordance with ASHRAE/ANSI Std. 15-70/ARI 520-78, ANSI B9.1-1971, and NEMA 70.

In addition to the built-up scientific freezer required in Section 070, scientific refrigerators and freezers must be provided in accordance with Table 667-~~2~~9.

Table 667-29. Scientific Refrigerators and Freezers

Qty	Item	Capacity	Type	Location
1	Flash Freezer (-20 °C)	[ECP 0001A]1.4 0.7 m^3	Rapid freeze, chest upright type[ECP 0001A]	Wet Laboratory
1	Ultra Cold Freezer (-80°C)	[ECP 0001E]0.8 40.25 m^3[ECP 0001E]	Chest type	Chemistry Laboratory
1	Refrigerator	[ECP 0003A]0.8 40.18 m^3	Under-counter type, such as Hoffman Model 3557. Rated for storage of flammable chemicals such as formalin[ECP 0003A]	Chemistry Laboratory
[ECP 0002I] 1	Ice Machine	120 kg/day	Flake Ice	Chemistry Laboratory, Wet Laboratory or Fish Laboratory[ECP 0002I]

667f. Emergency Safety Equipment

Eye/face wash fountains and deluge showers such as **Haws Model 8346 PCP** must be provided in the Fish Laboratory, Chemistry Laboratory, Wet Laboratory, and Dry Laboratory as required by Regulatory Bodies. [ECP 0024] The Fish Laboratory and Wet Laboratory may share a single eye/face wash fountain and deluge shower. The eye/face wash fountain and deluge shower must be provided with a coaming, located to avoid a tripping hazard. An eye/face wash fountain only is required for the Dry Laboratory, however piping for a deluge shower must also be provided. [ECP 0024]

[ECP 0001D]~~667g. Computer Laboratory~~

~~The Computer Laboratory must be provided with furnishings in accordance with Table 667-3.~~

~~**Table 667-3. Computer Laboratory Furnishings**~~

~~Qty~~	~~Item~~	~~Type~~	~~Remarks~~
~~7~~	~~Computer Workstation~~	~~Modular units~~	~~1200 mm x 760 mm~~
~~7~~	~~Swivel Arm Chair~~		
~~5~~	~~Equipment Rack~~	~~19 inch (483 mm) standard, 915 mm depth~~	~~1800 mm high, with 1200 mm clearance behind~~
~~2~~	~~Waste Basket~~		

~~667h. Acoustic Laboratory~~

~~In addition to the cabinetry and furnishings required herein, the Acoustic Laboratory must be provided with furnishings in accordance with Table 667-4.~~

~~Table 667-4. Acoustic Laboratory Furnishings~~

~~Qty~~	~~Item~~	~~Type~~	~~Remarks~~
~~2~~	~~Computer Workstation~~	~~Modular units~~	~~1200 mm x 760 mm~~
~~2~~	~~Swivel Arm Chair~~		
~~2~~	~~Equipment Rack~~	~~19 inch (483 mm) standard, 915 mm depth~~	~~1800 mm high, with 1200 mm clearance behind~~
~~1~~	~~Waste Basket~~		

[ECP 0001D]

667~~i~~g. Fish Laboratory

The Fish Laboratory must be equipped with the cabinetry and furnishings required herein, in addition to the requirements of Sections 591 and 493.

667~~j~~h. Marine Mammal Observation Station

The Marine Mammal Observation Stations must each be provided with deck sockets and bolts for two binocular mounting stands, two rubber standing mats, the pelorus stand and gyro repeater required by Section 421, the awning specified in Section 613, and a clear plexiglass windscreen. Each binocular mounting stand requires four deck sockets and bolts. Each windscreen must be 3000 mm in length, with the top of the windscreen at a height of 1600 mm above the deck.

Watertight Scientific Power and SCS connections must be provided on the top of the Bridge on centerline, aft of the Marine Mammal Observation Stations. [ECP 0003B]Four deck sockets and bolts ~~A permanently mounted padded seat~~ must be provided at this centerline data station.[ECP 0003B]

[ECP 0001D]**667~~k~~i. ~~Autosalinometer Room~~Controlled Environment Room**

The Controlled Environment Room must be equipped with the cabinetry and furnishings required by Table 667-10.

Table 667-10. Controlled Environment Room

Qty	Item	Type	Linear Measurement	Remarks
1	Base cabinet with doors		1500 mm	Includes sink cabinets
1	Bulkhead cabinet		600 mm	
1	Bulkhead shelf	355 mm deep with 100 mm lip	3750 mm	2 shelves, open wire, CRES

Qty	Item	Type	Linear Measurement	Remarks
1	Standing shelf	355 mm deep with 100 mm lip	2400 mm	3 shelves, open wire, CRES
1	Benchtop	740 mm tall, 600 mm wide	5500 mm	
1	Benchtop	910 mm tall	1500 mm	Single sink

~~The autosalinometer room must be provided with a vestibule as shown on the Project Peculiar Documents. 3800 mm of 740 mm high bench-top, with cabinetry and doors below, must be provided.~~[ECP 0001D]

670 STOWAGE REQUIREMENTS

670a. General

Stowage aids must be provided for portable articles, repair parts, food service equipment and similar items as required herein. Stowage aids must be designed and installed to retain the stowed material without damage under the maximum dynamic conditions of roll, pitch, list, and trim. Bin, rack, and shelving compartments, with vertical compartment clear openings of 125 mm or more, must be provided with removable horizontal battens. Front flanges of lower shelves of bins, racks and shelving must be stiffened, as necessary, to prevent damage from persons climbing to upper bins or shelves. Stops must be provided on backs of shelving and bins.

Where cabinets with modular drawer units are required, they must conform to GSA standard A-A-59470 “Cabinets, Modular Drawer Storage (Naval Shipboard) with lock-in/lock-out drawers.

671 SPECIAL STOWAGE

HAZMAT Locker. - A removable HAZMAT Locker, such as Justrite Model 25732, must be provided in ~~[PA62]~~the Chemistry Laboratory for storage of scientific chemicals and reagents. The Locker must be rated for flammable liquids, must have self-closing doors, must have a capacity of at least 83 liters [PA63]and must be equipped with adjustable shelving and tiedown points.

[NECP 001]~~**Flammable Liquid Locker.** – A flammable liquid locker with a deck area of 1.9 m^2 must be provided. Location and stowage must comply with Regulatory Body requirements.~~ [NECP 001]

Sewage Treatment Locker. - A locker must be provided for stowage of packaged sodium hypochlorite for sewage treatment.

Exposure Suit Stowage. - Stowage racks must be provided for all exposure suits.

Cleaning Gear Locker. - Cleaning Gear Lockers must be provided with a service sink, louvered door, shelving, and swab and broom rack.

Linen Locker. - Linen Lockers must be provided one each deck, each with three courses of 1000 mm deep shelving.

Pyrotechnics Stowage. - A pyrotechnics locker must be provided with sun shielding and in the weather near the Bridge. Stowage of pyrotechnics must be in accordance with regulatory requirements.

Gun Locker. - A Small Arms Locker must be provided in the Commanding Officer's stateroom. The locker must be built of 14 gage steel and must be welded to the deck or bulkhead. The locker must meet or exceed GSA requirements for security Containers.

Dive Locker. - The Dive Locker must be equipped with racks for hanging four dry suits. Stowage racks must be provided for eight SCUBA tanks. Two, 2000 mm long sections of 762 mm deep shelving and one, 762 mm by 1000 mm double door storage cabinet must be provided. Maximum separation of gear and the dive air compressor must be maintained.

[NECP 001]~~**Paint Locker.** - A paint locker with a 7.4 m^3 capacity must be provided, collocated with the Bosun's Locker. Metal shelving and all required fire suppression and ventilation systems must be provided.~~ [NECP 001]

Deck Gear Lockers. - [NECP 001]Two deck gear lockers must be provided, one forward and one aft~~, with a minimum area of 4.4 m^2 each~~. Stowage bins and racks must be provided. Swab and broom racks must be installed as directed by the ConRep. [NECP 001]

[NECP 001]**Battery ~~Locker~~Stowage.** - ~~The~~ Battery ~~Locker~~ stowage must be provided in accordance with ~~meet all~~ regulatory requirements. [NECP 001]

672 STOREROOMS

Storerooms or portions thereof designated for bulk stowage must be fitted with fixed battens adjacent to structural boundaries and with removable stowage stanchions. The ends of the stanchions must be compatible with fittings on the deck and overhead. Fixed battens must be fitted on shell plating, framing or structural bulkheads in bulk stores area, and must prevent stores from contacting surfaces on which condensation is likely to occur. Installation of fixed battens must permit circulation of air and protect insulation, piping and wire cables from being damaged by stores. Remote operating mechanisms must be protected from stores interfering with their operation. The ends of the battens must be closed.

Steward's Stores. – The Steward's Stores must be provided with storage bins, 4500 mm in total length, 600 mm deep by 2000 mm high, with six shelves and vertical supports drilled on 75 mm centers so shelves may be adjusted vertically.

Dry Stores. - The Dry Stores must be provided with storage bins, 12.0 m in total length, 600 mm deep by 2000 mm high, with six shelves and vertical supports drilled on 75 mm centers so shelves may be adjusted vertically.

Bosun's Stores. - Shelves, pipe, jackrods, portable metal battens and hooks for blocks and tackle must be provided in the Bosun's Stores. Line stowage must be provided below the weather deck, fore and aft.

Engineer's Stores. - The Engineer's Storeroom must be provided with shelves, pipe, jackrods, portable metal battens and hooks.

Equipment and Repair Parts Storerooms. - Modular drawer-type stowage must be used where practicable. A separate locker must be provided for high value stores.

Scientific Storeroom. - The Scientific Storeroom must be provided with stowage bins, 18.0 m in total length, 600 mm deep by 2000 mm high, with six shelves and vertical supports drilled on 75 mm centers so shelves may be adjusted vertically.

==========